تسلاکالا
021-9102 6126 | teslakala.com

FRAKO

MAIN CATALOGUE



POWER FACTOR CORRECTION

POWER QUALITY SOLUTIONS

POWER QUALITY AND ENERGY MEASUREMENTS

DATA COLLECTION

DATA PROCESSING

SOLUTIONS

POWER QUALITY

www.frako.com

2025

تسلاکالا
021-9102 6126 | teslakala.com



FRAKO – Leading-edge technology for safe and reliable network solutions

FRAKO's mission is to provide solutions that are designed and optimized to meet the needs of our customers. Our accumulated experience and our expertise in development and manufacture are applied to achieve this. The operational reliability of our products is as well known internationally as our track record in developing new solutions.

Every sphere, every activity and every operation of our company is hallmarked by quality. This bears fruit in FRAKO's renowned product quality as well as the quality of our advisory and field services. We value reliability, punctuality and transparency with the same commitment we have for durability and performance. This is why FRAKO today leads the entire world in its areas of business:

- High quality capacitors
- Individually specified power factor correction systems
- Efficient power quality solutions
- Intelligent Energy Management Systems
- Dependable customer service before and after sales

Updates for FRAKO Products now on LinkedIn

Our customers and business partners know that: FRAKO means quality, and that quality means safety and reliability. Because of this we can shoulder the responsibility for the correct functioning, profitability and environmental compatibility of our products and can guarantee their safety to life, limb and property. We are in a position to fulfil the most demanding requirements and develop innovative solutions to suit individual needs.

Our excellently trained and motivated employees have the technical competence and in-depth expertise to design and implement new installations successfully. We ourselves also take particular care to ensure that energy is used sparingly and efficiently in the manufacture and operation of our products. Our own energy consumption and the emissions generated are continually monitored with our in-house Energy Management System to ensure that we achieve the highest levels of energy efficiency and environmental compatibility.

For the future we are committed to an ongoing and intensive effort to maintain our leading position and to justify the trust placed in us by our customers in the fields of power quality, energy cost minimization and energy efficiency.

At FRAKO we look forward to developing, manufacturing and supplying innovative and productive systems for our customers and business partners in the future.

Dr. Matthias Sehmsdorf

QUALITY means safety and reliability

Exacting and ever more demanding quality specifications in all areas are the criteria for our products and services.

A particularly important role in meeting this challenge is our individual advisory and project planning. The basis for our successful cooperation with our customers is given by our certified quality and environmental management systems and our own research and development departments. On top of this we always adhere to our guiding principles that make us a straightforward and agreeable partner to work with. You can always take us at our word; for us that is as much a matter of course as being able to deliver, delivering on time and reacting promptly to handle any complaints.

As a supplier of complete systems, we pay attention to the quality and good working order of every individual component. In this way we achieve the high profitability and increased service life of our installations and systems. We fulfil the most exacting requirements in all areas: when advising customers, honouring commitments and turning individual needs into concrete products and special services.

FRAKO POWER CAPACITORS

FRAKO power capacitors offer ‘Made in Germany’ quality and form the optimum basis for both fixed installed capacitance for specific duties and controlled power factor correction systems. Our power capacitors incorporate a fourfold safety system for maximum operational reliability. They are the first choice when consumers worldwide need to reduce reactive power, improve power quality and avoid charges for reactive demand.

Distinct advantages of our power capacitors:

- High overload capability
- Long service life
- Maximum operational reliability

FRAKO’s patented power capacitors are lead-free because of the patented contact ring and comply with the RoHS Directive. They are available in Basic, Standard and Heavy Duty versions, so that you can specify the ideal power capacitor for your individual requirements in terms of ampacity, ambient temperature and expected service life.

POWER QUALITY & POWER FACTOR CORRECTION

Poor power quality in the supply network can result in upsets or even failure in technical equipment and installations. FRAKO power quality products offer the right solution to maintain the quality of the power supply at a high level.

FRAKO’s power factor correction and filter systems are individually designed for the user, as are our active harmonic filters.

They are installed at those locations where electrical energy is to be saved, voltage fluctuations avoided and harmonics eliminated, or simply where reactive power must be compensated.

POWER QUALITY & ENERGY MANAGEMENT SYSTEMS

FRAKO Energy Management Systems help your company to cut costs and achieve energy efficiency.

The FRAKO Energy Management System supplies the optimum basis for all decisions to be made in optimizing energy consumption. With a FRAKO Energy Management System in place, the flow of utilities in the company is made transparent, their costs can be clearly allocated and accurately charged for, and approaches to saving energy become much easier to identify.

CUSTOMER SERVICES

FRAKO’s range of services offers a comprehensive program for achieving high energy efficiency and availability.

Particular importance is attached to the individual advisory and training services offered to our customers, special inspection and maintenance contracts and customized project execution. Every solution that we propose to our customers is based on detailed network measurement readings and an in-depth analysis of the status quo and individual requirements.

Subject to technical changes / © FRAKO GmbH / www.frako.com

تسلاکالا
021-9102 6126 | teslakala.com

Contents



POWER FACTOR CORRECTION

Page 6



POWER QUALITY SOLUTIONS

Page 166



POWER QUALITY AND ENERGY MEASUREMENTS

Page 194

تسلاکالا
021-9102 6126 | teslakala.com

POWER FACTOR CORRECTION

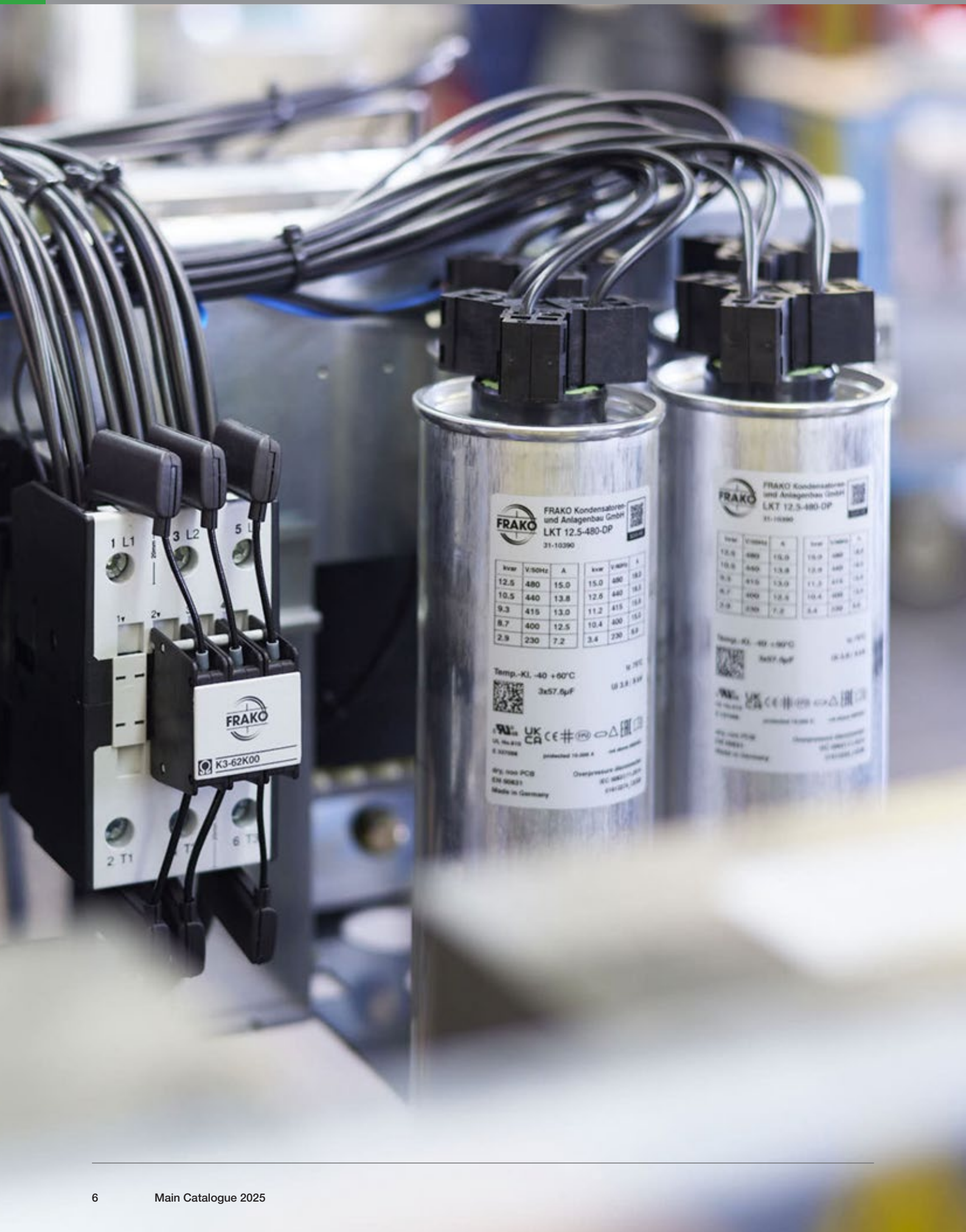

تسلاکالا
021-9102 6126 | teslakala.com

POWER FACTOR CORRECTION

Components

Page 8



1

PFC Capacitors in sheet steel cases

Page 64



2

PFC Systems on mounting plates / Capacitor Modules

Page 78



3

Accessory equipment for PFC Systems and modules

Page 98

4

PFC Systems

Page 112





5

Technical Annex

Page 152

6

تسلاکالا
021-9102 6126 | teslakala.com

1 Components

Power Capacitors and accessories

Page 9

Power Electronics Capacitors

Page 21

Standard Harmonic Filter Reactors

Page 35

Power Quality Controller

Page 43

Power Quality Controller Professional

Page 49

Power Factor Control Relays

Page 53

Capacitor Switching Contactors for Power Factor Correction Systems with or without reactors

Page 57

Discharge Reactors

Page 61

Subject to technical changes / © FRAKO GmbH / www.frako.com

تسلاکالا
021-9102 6126 | teslakala.com



LKT
Power Capacitors

FRAKO Power Capacitors are installed in power factor correction systems and in passive filters.

FRAKO Power Capacitors have been developed and manufactured for decades solely at the company's Teningen production site in Germany. This has resulted in a consistently high product quality being maintained, the basis for assured operational reliability and a long service life.

Application Recommendations

FRAKO offers Power Capacitors for a variety of applications. They are divided into four separate categories with different specifications:

- Basic Capacitors
- Standard Capacitors
- Heavy Duty Capacitors

FRAKO Power Capacitors are available as single-phase and 3-phase versions.

Voltage and power ranges:

- Nominal voltage: 240–800 V, 50 / 60 Hz
- Nominal power: 1.0–40.0 kvar

تسلاکالا
021-9102 6126 | teslakala.com

Design & quality

FRAKO Power Capacitors are manufactured in a unique dry design. Each comprises up to three interconnected capacitor coils wound in a low-loss, metallized polypropylene film and enclosed in a cylindrical aluminium casing provided with an M12 mounting stud. In addition to a PCB-free, flame-resistant mineral filler material, the casings also contain an adhesive stabilizer. Discharge resistors, permanently connected in the factory, guarantee that the residual voltage falls to <50 V within one minute after the capacitor has been disconnected. Cables are connected by means of the tried-and-tested spring clamps of the AKD range, which are 'finger-safe' and maintenance-free.

The use of rigorously inspected materials and their careful processing guarantee excellent quality and a long product service life. FRAKO manufactures its Power Capacitors to its own in-house specifications, which are far more exacting than the requirements of the applicable standards.

Quality control inspections after each individual manufacturing step ensure that the final product is of a high quality. These demanding quality standards, together with specially developed manufacturing technology, enable FRAKO Power Capacitors to achieve a longer-than-average service life. At the end of the manufacturing process, each capacitor is inspected individually. The in-house requirements for this special inspection are considerably more stringent than those of the routine tests specified by the relevant standards.

Standards

All FRAKO Power Capacitors comply with the international standards IEC 60831-1 and -2, and of course with EN 60831 1 and -2. In addition to the CE marking, our capacitors meet the standards and specifications for UL 810, UKCA, EAC as well as the ISI marking. A special series developed for the North American market also fulfils the CSA 22.2 No. 190 standard.

Four safety features ensure uninterrupted operation

The reliability of Power Capacitors is crucially important for the problem-free operation of power factor correction systems and passive filters. FRAKO's measures to ensure this are now fourfold:
Power Capacitors nowadays usually use polypropylene as the dielectric material, its surfaces being metallized. This design has the important property that if local overloading occurs and punctures the substrate film, the fault automatically isolates itself, a phenomenon known as **self-healing**.

Self-healing is due to the heavy short-circuit current that flows between the films immediately vaporizing the very thin metal coating at the damaged location, thus ending the flow of current.

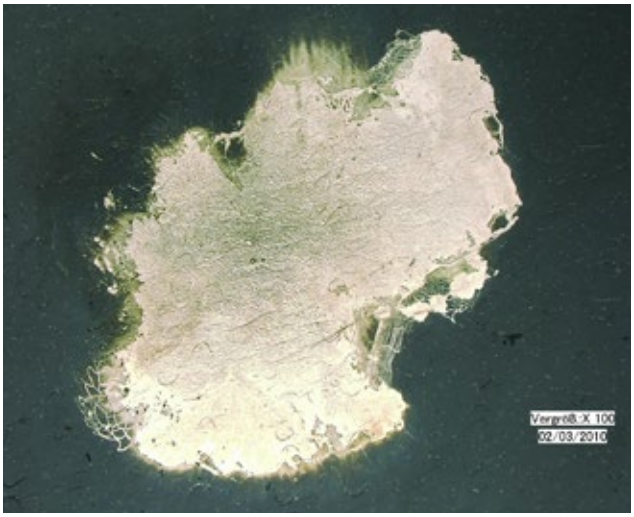

If several punctures occur in a small area of metallized film, the amount of energy involved might be too much for the **self-healing** action alone to cope with. This could lead to complete failure of the capacitor. However, in this case the second fail-safe function of the fourfold safety design comes into play: the **segmented metallization.**

In the manufacturing process, the polypropylene film for FRAKO Power Capacitors is metallized by vapour deposition to form a pattern of separate individual segments. Each segment is connected to the power supply by slender contact bridges, these being so dimensioned that when severely overloaded (several substrate punctures within one segment), they act as fuses by simply vaporizing, thereby securely isolating the damaged segment from the power supply.



The **segmented metallization** technique increases the reliability of the capacitors and prolongs their service life.

Subject to technical changes / © FRAKO GmbH / www.frako.com

تسلاکالا
021-9102 6126 | teslakala.com

FRAKO Power Capacitors

The third design feature for increases product safety is the three-phase **overpressure disconnector**, a mechanical fuse included in every FRAKO capacitor.
If an excessive internal pressure develops due to overloading, or at the end of the capacitor's service life, the mechanical fuse isolates the capacitor safely from the power supply by disconnecting all poles. Should puncturing of the dielectric occur on a major scale, this results in the substrate film melting and generating gases inside the casing, thus building up pressure in the capacitor. This causes the diaphragm lid to bulge outwards, thereby tensioning the internal leads to the coils until they act as mechanical fuses, breaking cleanly at defined locations. The bulging of the lid also increases the internal volume, therefore reducing the pressure inside the capacitor. Please note that the over-pressure disconnector can only function reliably when used within the specified parameters.

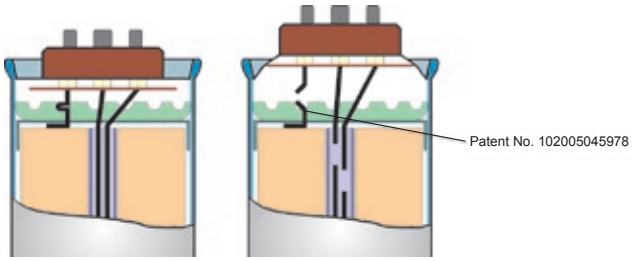

Principle of the overpressure disconnection system

In 2015, FRAKO added the patented **contact ring** to the other safety and reliability features, thus making them fourfold.

These patented rings are stamped from a special alloy and are formed with a number of pointed teeth that press into the zinc end-face contact layers on the windings to make electrical contact. The internal connecting leads are spot-welded to the **contact rings** before final assembly of the capacitor.

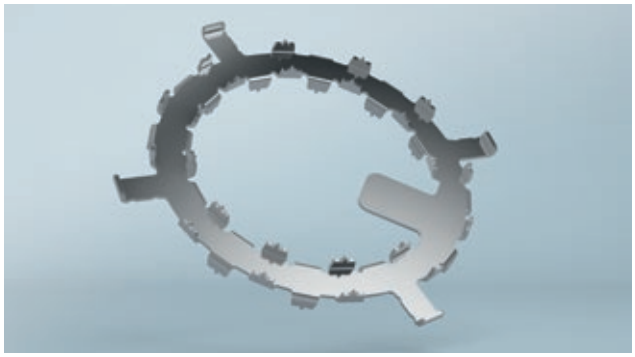

The great advantage of this solder-free design: it has completely excluded the risk of damaging the capacitor windings at the manufacturing stage due to overheating during soldering of the connecting leads. The quality of the winding connection is significantly increased, and the reliability of the mechanical fuse that protects against excessive internal pressure is improved by its being securely spot-welded in place.

The **contact ring** also enables FRAKO to produce completely lead-free capacitors and make yet another improvement to their operating reliability.

Special technical features

In our ongoing development work on FRAKO Power Capacitors, we always focus on those attributes that are called for in present-day applications. The three following factors are especially important:

- Overvoltage tolerance
- Current-carrying capacity
- Thermal endurance

Overvoltage tolerance

As required by the standards IEC 60831-1 & -2, as with EN 60831-1 & -2, all FRAKO Power Capacitors are designed to withstand the following overvoltages:

8 hours daily:	1.10 × capacitor nominal voltage
30 minutes daily:	1.15 × capacitor nominal voltage
5 minutes:	1.20 × capacitor nominal voltage
1 minute:	1.30 × capacitor nominal voltage

The following table shows a selection of nominal voltage ratings and maximum overvoltages:

Capacitor nominal voltage	240	400	440	480	525	600	690	760	800
8 hours daily	264	440	484	528	578	660	759	836	880
30 min daily	276	460	506	552	604	690	794	874	920
5 minutes	288	480	528	576	630	720	828	912	960
1 minute	312	520	572	624	683	780	897	988	1040

All voltages in volts [V]

Current-carrying capacity

All over the modern world, harmonics are polluting the electricity supply networks. The increasing use of devices such as frequency converters has a growing impact on capacitors. If these are operated in a power supply network contaminated by harmonics, dangerous resonances can result, which can again significantly increase the currents that the capacitors must withstand.

تسلاکالا
021-9102 6126 | teslakala.com

The applicable standards call for a continuous current-carrying capacity of at least 1.3 times the nominal current to be designed for in Power Capacitors. In reality, however, even this value can be exceeded under conditions with extreme levels of harmonics.

For this reason, all FRAKO Power Capacitors are designed for a continuous current-carrying capacity of at least 1.5 times the nominal current. More information on ampacity is given in the specifications table on the following page.

Thermal endurance

Excessive temperatures also have a negative impact on the service life of a capacitor. Storage or operation of capacitors above their permitted temperature limits results in a drastic shortening of their service life. Power Capacitors are assigned to different temperature classes according to the permitted ambient temperature as follows:

Temperature class	Maximum ambient temperature		
	Absolute maximum temp.	Max. average temp. over 1 day	Max. average over 1 year
B	45 °C	35 °C	25 °C
C	50 °C	40 °C	30 °C
D	55 °C	45 °C	35 °C

The temperatures stated above refer to the direct environment of the capacitors. This means the internal temperature in the enclosure or control cabinet that houses them. Experience shows that the limits given in the table for the temperature classes can easily be exceeded in practice. Higher temperatures are to be expected in particular in the case of power factor correction systems fitted with filter reactors.

Power Capacitors in the Standard and Heavy Duty categories are therefore designed for continuous ambient temperatures of at least 60 °C.

This continuously rated thermal endurance is helped by the compact construction of the capacitors, which is conducive to optimum heat dissipation.

Maintenance-free capacitor connections

The connecting terminal (AKD) is based on the proven technology of the Wago Cage Clamp©. These connectors use special spring clamps that ensure a simple, vibration-resistant and maintenance-free electrical contact with the capacitor. They can be used to connect stranded or fine-filament copper cables. The AKD spring clamp complies with the IP20 rating as per EN 60529, thus qualifying as ‘finger-safe’.



Subject to technical changes / © FRAKO GmbH / www.frako.com

تسلاکالا
021-9102 6126 | teslakala.com

Specifications of FRAKO Power Capacitors

Category	Basic	Standard	Heavy Duty
Type designation	LKT …-DB	LKT …-DP	LKT …-HD
Nominal voltage	400–525 V	280–800 V	480–525 V
Nominal frequency	50/60 Hz		
Power rating	5.0–36 kvar	5.0–40 kvar	16.8–21.6 kvar
Capacitance tolerance[1]	-5 / +5 %		
Dielectric losses	0.2 W / kvar		
Power loss[2]	0.5 W / kvar		
Residual voltage after 60 seconds discharge time	≤50 V		
Maximum overvoltage	1.10 x V_N – 8 hours daily 1.15 x V_N – 30 minutes daily 1.20 x V_N – 5 minutes 1.30 x V_N – 1 minute		
Maximum continuous overcurrent at nominal voltage (50 Hz)	1.5 x I_N	1.8 x I_N	2.7 x I_N
Maximum inrush current at nominal voltage (50 Hz)	200 x I_N	250 x I_N	450 x I_N
Test voltage (metal film–metal film)	2.15 x V_N, 2 seconds 1.85 x V_N, 10 seconds		
Test voltage (metal film–casing)	V_N < 600 V = 3.9 kV, 2 seconds V_N > 600 V = 4.3 kV, 2 seconds		
Insulation voltage rating dependent on V_N and diameter	3.9 / 8 kV 3.9 / 12 kV 4.3 / 8 kV 4.3 / 12 kV		
Temperature class	-25 / D	-40 / 60	-40 / 68
Min. / max. temperature[3]	-25 / +55 °C	-40 / +60 °C	-40 / +68 °C
Max. casing temperature	+70 °C	+75 °C	+78 °C
Min. / max. storage temperature	-25 / +85 °C	-40 / +85 °C	
Max. humidity	95 % non-condensing		
Max. site altitude	4 000 metres		
Service life	130 000 h	160 000 h	250 000 h
Max. number of switching cycles per year	20 000	40 000	100 000

[1] Other tolerances on request

[2] Total power loss incl. discharge resistor

[3] The table of temperature classes on the previous page applies to capacitors of the Basic category. Capacitors of the categories Standard and Heavy Duty are specified for continuous operation at the stated maximum temperature.

تسلاکالا
021-9102 6126 | teslakala.com

Basic Capacitors (three-phase, V_N: 400 V...525 V)
Type LKT…-DB for 50 Hz / 60 Hz

Article-No.	Type	Capacitance [µF]	Rated Reactive Power in kvar at Rated Voltage (V_N) 50 Hz / 60 Hz							Rated current at V_N 50 Hz / 60 Hz [A]	Dimensions (d x h) Weight (net) [mm] [kg]	Packing Unit (pcs.)
			230 V	300 V	400 V	415 V	440 V	480 V	525 V			
31-10414	LKT 5-400-DB	3 x 33.2	1.66 2.0	2.8 3.33	5.0 6.0					7.2 8.7	60 × 150 0.590	9
31-10400	LKT 6.25-400-DB	3 x 41.4	2.1 2.5	3.5 4.2	6.25 7.5					9.0 10.8	60 × 150 0.590	9
31-10415	LKT 7.5-400-DB	3 x 49.7	2.5 3.0	4.2 5.1	7.5 9.0					10.8 13.0	60 × 150 0.590	9
31-10416	LKT 10-400-DB	3 x 66.3	3.33 4.0	5.6 6.8	10.0 12.0					14.4 17.3	60 × 225 0.840	9
31-10401	LKT 12.5-400-DB	3 x 82.9	4.17 5.0	7.0 8.4	12.5 15.0					18.0 21.7	60 × 225 0.840	9
31-10417	LKT 15-400-DB	3 x 99.5	5.0 6.0	8.4 10.1	15.0 18.0					21.7 26.0	70 × 225 1.090	9
31-10418	LKT 20-400-DB	3 x 132.6	6.66 7.9	11.3 13.5	20.0 24.0					28.9 34.6	85 × 215 1.550	4
31-10402	LKT 25-400-DB	3 x 165.8	8.33 9.9	14.1 16.9	25.0 30.0					36.1 43.3	85 × 278 1.900	4
31-10403	LKT 30-400-DB	3 x 198.9	9.9 11.9	16.9 20.3	30.0 36.0					43.3 52.0	85 × 320 2.200	4
31-10404	LKT 6.25-440-DB	3 x 34.3	1.7 2.0	2.9 3.5	5.2 6.2	5.6 6.7	6.25 7.5			8.2 9.8	60 × 150 0.590	9
31-10412	LKT 10-440-DB	3 x 54.8	2.7 3.33	4.7 5.6	8.33 9.9	8.9 10.7	10.0 12.0			13.1 15.7	60 × 225 0.840	9
31-10379	LKT 12.5-440-DB	3 x 68.5	3.4 4.1	5.8 7.0	10.3 12.4	11.1 13.3	12.5 15.0			16.4 19.7	70 × 225 1.090	9
31-10406	LKT 15-440-DB	3 x 82.2	4.1 4.9	7.0 8.4	12.4 14.9	13.3 16.0	15.0 18.0			19.7 23.6	70 × 225 1.090	9
31-10436	LKT 20-440-DB	3 x 109.6	5.5 6.66	9.3 11.2	16.5 19.8	17.8 21.4	20.0 24.0			26.2 31.5	85 × 215 1.550	4
31-10407	LKT 25-440-DB	3 x 137.0	6.8 8.2	11.6 14.0	20.7 24.8	22.2 26.7	25.0 30.0			32.8 39.4	85 × 278 1.900	4
31-10437	LKT 28.2-440-DB	3 x 154.6	7.7 9.2	13.1 15.7	23.3 27.9	25.0 30.0	28.2 33.8			37.0 44.4	85 x 278 1.900	4
31-10408	LKT 30-440-DB	3 x 165.8	8.3 9.9	14.1 16.9	25.0 30.0	26.9 32.3	30.3 36.3			39.7 47.6	85 × 278 1.900	4
31-10440	LKT 7.2-480-DB	3 x 33.2	1.7 2.0	2.8 3.4	5.0 6.0	5.4 6.5	6.1 7.3	7.2 8,6		8.7 10.4	60 x 225 0.840	9
31-10441	LKT 14.4-480-DB	3 x 66.3	3.3 4.0	5.6 6.8	10.0 12.0	10.8 12.9	12.1 14.5	14.4 17.3		17.3 20.8	70 x 225 1.090	9
31-10442	LKT 18-480-DB	3 x 82.9	4.17 5.0	7.0 8.4	12.5 15.0	13.5 16.2	15.1 18.2	18.0 21.6		21.7 26.0	70 x 265 1.240	9
31-10443	LKT 28.8-480-DB	3 x 132.6	6.6 7.9	11.3 13.5	20.0 24.0	21.5 25.8	24.2 29.0	28.8 34.6		34.6 41.6	85 x 278 1.900	4
31-10438	LKT 33.3-480-DB	3 x 153.4	7.7 9.2	13.0 15.6	23.1 27.8	24.9 29.9	28.0 33.6	33.3 40.0		40.1 48.1	85 x 320 2.200	4
31-10409	LKT 6.25-525-DB	3 x 24.1	1.2 1.4	2.0 2.4	3.6 4.4	3.9 4.7	4.4 5.3	5.2 6.3	6.25 7.5	6.9 8.2	60 × 150 0.590	9
31-10435	LKT 10-525-DB	3 x 38.5	1.9 2.3	3.3 3.9	5.8 7.0	6.3 7.5	7.0 8.4	8.4 10.0	10.0 12.0	11.0 13.2	60 × 225 0.840	9
31-10410	LKT 12.5-525-DB	3 x 48.1	2.4 2.9	4.1 4.9	7.3 8.7	7.8 9.4	8.8 10.5	10.4 12.5	12.5 15.0	13.7 16.5	70 × 225 1.090	9
31-10419	LKT 15-525-DB	3 x 57.7	2.9 3.5	4.9 5.9	8.7 10.5	9.4 11.3	10.5 12.6	12.5 15.1	15.0 18.0	16.5 19.8	70 × 225 1.090	9

Subject to technical changes / © FRAKO GmbH / www.frako.com

تسلاکالا
021-9102 6126 | teslakala.com

Article-No.	Type	Capacitance [µF]	Rated Reactive Power in kvar at Rated Voltage (V_N) 50 Hz / 60 Hz 230 V	300 V	400 V	415 V	440 V	480 V	525 V	Rated current at V_N 50 Hz / 60 Hz [A]	Dimensions (d x h) Weight (net) [mm] [kg]	Packing Unit (pcs.)
31-10434	LKT 17.2-525-DB	3 x 66.2	3.3 4.0	5.6 6.7	10.0 12.0	10.8 12.9	12.1 14.5	14.4 17.3	17.2 20.6	18.9 22.7	70 × 225 1.090	9
31-10420	LKT 20-525-DB	3 x 77.0	3.8 4.6	6.5 7.8	11.6 13.9	12.5 15.0	14.1 16.9	16.7 20.1	20.0 24.0	22.0 26.4	70 × 265 1.240	9
31-10411	LKT 25-525-DB	3 x 96.2	4.8 5.8	8.2 9.8	14.5 17.4	15.6 18.8	17.6 21.1	20.9 25.1	25.0 30.0	27.5 33.0	85 × 278 1.900	4
31-10439	LKT 30-525-DB	3 x 115.5	5.8 6.9	9.8 11.8	17.4 20.9	18.8 22.5	21.1 25.3	25.1 30.1	30.0 36.0	33.0 39.6	85 x 278 1.900	4

Standard Capacitors (three-phase, V_N: 300 V...480 V)
Type LKT…-DP for 50 Hz / 60 Hz

Article-No.	Type	Capacitance [µF]	Rated Reactive Power in kvar at Rated Voltage (V_N) 50 Hz / 60 Hz 230 V	300 V	400 V	415 V	440 V	460 V	480 V	Rated current at V_N 50 Hz / 60 Hz [A]	Dimensions (d x h) Weight (net) [mm] [kg]	Packing Unit (pcs.)
31-10523	LKT 7.1-300-DP	3 x 83.7	4.17 5.0	7.1 8.5						13.7 16.4	60 x 225 0.840	9
31-10553	LKT 14.2-300-DP	3 x 167.1	8.33 10.0	14.2 17.0						27.3 32.7	85 x 215 1.550	4
31-10525	LKT 21.3-300-DP	3 x 251.1	12.5 15.0	21.3 25.5						41.0 49.2	85 x 278 1.900	4
31-10500	LKT 5-400-DP	3 x 33.2	1.66 2.0	2.8 3.33	5.0 6.0					7.2 8.7	60 x 150 0.590	9
31-10380	LKT 10-400-DP	3 x 66.3	3.33 4.0	5.6 6.8	10.0 12.0					14.4 17.3	70 × 225 1.090	9
31-10502	LKT 12.5-400-DP	3 x 82.9	4.17 5.0	7.0 8.4	12.5 15.0					18.0 21.7	70 × 225 1.090	9
31-10503	LKT 15-400-DP	3 x 99.5	5.0 6.0	8.4 10.1	15.0 18.0					21.7 26.0	70 × 265 1.240	9
31-10504	LKT 20-400-DP	3 x 132.6	6.66 8.0	11.3 13.5	20.0 24.0					28.9 34.6	85 × 278 1.900	4
31-10505	LKT 25-400-DP	3 x 165.8	8.33 9.9	14.1 16.9	25.0 30.0					36.1 43.3	85 × 278 1.900	4
31-10534	LKT 3.8-440-DP	3 x 20.8	1.0 1.25	1.8 2.1	3.1 3.8	3.4 4.1	3.8 4.6			5.0 6.0	60 × 150 0.590	9
31-10508	LKT 10-440-DP	3 x 54.8	2.7 3.33	4.7 5.6	8.33 9.9	8.9 10.7	10.0 12.0			13.1 15.7	60 × 225 0.840	9
31-10672	LKT 11.3-440-DP	3 x 61.7	3.1 3.7	5.2 6.3	9.3 11.2	10.0 12.0	11.3 13.5			14.8 17.7	70 × 225 1.090	9
31-10507	LKT 12.5-440-DP	3 x 68.5	3.4 4.1	5.8 7.0	10.3 12.4	11.1 13.3	12.5 15.0			16.4 19.1	70 × 225 1.090	9
31-10673	LKT 14.1-440-DP	3 x 77.6	3.9 4.6	6.6 7.9	11.7 14.0	12.6 15.1	14.1 17.0			18.6 22.3	70 × 225 1.090	9
31-10381	LKT 15-440-DP	3 x 82.2	4.1 4.9	7.0 8.33	12.4 15.9	13.3 16.0	15.0 18.0			19.7 23.6	70 × 265 1.240	9
31-10512	LKT 20-440-DP	3 x 109.6	5.5 6.66	9.3 11.2	16.5 19.8	17.8 21.4	20.0 24.0			26.2 31.5	85 × 278 1.900	4
31-10510	LKT 25-440-DP	3 x 137.0	6.8 8.2	11.6 14.0	20.7 24.8	22.2 26.7	25.0 30.0			32.8 39.4	85 × 278 1.900	4
31-10535	LKT 28.2-440-DP	3 x 154.6	7.7 9.2	13.1 15.7	23.3 27.9	25.0 30.0	28.2 33.8			37.0 44.4	85 × 320 2.200	4

تسلاکالا
021-9102 6126 | teslakala.com

Article-No.	Type	Capacitance [µF]	Rated Reactive Power in kvar at Rated Voltage (V_N) 50 Hz / 60 Hz 230 V	300 V	400 V	415 V	440 V	460 V	480 V	Rated current at V_N 50 Hz / 60 Hz [A]	Dimensions (d x h) Weight (net) [mm] [kg]	Packing Unit (pcs.)
31-10509	LKT 30-440-DP	3 x 165.8	8.3 9.9	14.1 16.9	25.0 30.0	26.9 32.3	30.3 36.3			39.7 47.6	85 × 320 2.200	4
31-10674	LKT 9.1-480-DP	3 x 41.7	2.1 2.5	3.5 4.2	6.3 7.5	6.8 8.1	7.6 9.1	8.3 10.0	9.1 10.9	10.9 13.1	60 × 225 0.840	9
31-10675	LKT 10.8-480-DP	3 x 49.9	2.5 3.0	4.2 5.1	7.5 9.0	8.1 9.7	9.1 10.9	10.0 12.0	10.8 12.0	13.0 15.6	70 × 225 1.090	9
31-10390	LKT 12.5-480-DP	3 x 57.6	2.9 3.4	4.9 5.9	8.7 10.4	9.3 11.2	10.5 12.6	11.5 13.8	12.5 15.0	15.0 18.0	70 × 225 1.090	9
31-10676	LKT 14.4-480-DP	3 x 66.3	3.3 4.0	5.6 6.8	10.0 12.0	10.8 12.9	12.1 14.5	13.2 15.9	14.4 17.3	17.3 20.8	70 × 225 1.090	9
31-10382	LKT 15.5-480-DP	3 x 71.4	3.6 4.3	6.1 7.3	10.8 13.0	11.6 13.9	13.1 15.7	14.2 17.1	15.5 18.6	18.6 22.4	70 × 265 1.240	9
31-10522	LKT 18-480-DP	3 x 82.9	4.17 5.0	7.0 8.4	12.5 15.0	13.5 16.2	15.1 18.2	16.5 19.8	18.0 21.6	21.7 26.0	70 × 265 1.240	9
31-10559	LKT 31-480-DP	3 x 142.8	7.1 8.5	12.1 14.5	21.5 25.8	23.2 27.8	26.1 31.3	28.5 34.2	31.0 37.2	37.3 44.7	85 × 320 2.200	4
31-10558	LKT 33.3-480-DP	3 x 153.4	7.7 9.2	13.0 15.6	23.1 27.8	24.9 29.9	28.0 33.6	30.6 36.7	33.3 40.0	40.1 48.1	85 × 320 2.200	4

Standard Capacitors (three-phase, V_N = 525 V)
Type LKT…-DP for 50 Hz / 60 Hz

Article-No.	Type	Capacitance [µF]	Rated Reactive Power in kvar at Rated Voltage (V_N) 50 Hz / 60 Hz 230 V	300 V	400 V	415 V	440 V	480 V	525 V	Rated current at V_N 50 Hz / 60 Hz [A]	Dimensions (d x h) Weight (net) [mm] [kg]	Packing Unit (pcs.)
31-10678	LKT 5.4-525-DP	3 x 20.7	1.0 1.2	1.8 2.1	3.1 3.8	3.4 4.0	3.8 4.5	4.5 5.4	5.4 6.5	5.9 7.1	60 × 225 0.840	9
31-10801	LKT 9.3-525-DP	3 x 35.9	1.8 2.2	3.0 3.7	5.4 6.5	5.8 7.0	6.6 7.9	7.8 9.4	9.3 11.2	10.2 12.3	60 × 225 0.840	9
31-10517	LKT 10-525-DP	3 x 38.5	1.9 2.3	3.3 3.9	5.8 7.0	6.3 7.5	7.0 8.33	8.33 10.0	10.0 12.0	11.0 13.2	70 × 225 1.090	9
31-10516	LKT 12.5-525-DP	3 x 48.1	2.4 2.9	4.1 4.9	7.3 8.7	7.8 9.4	8.8 10.5	10.4 12.5	12.5 15.0	13.7 16.5	70 × 225 1.090	9
31-10520	LKT 15-525-DP	3 x 57.7	2.9 3.5	4.9 5.9	8.7 10.4	9.4 11.3	10.5 12.6	12.5 15.0	15.0 18.0	16.5 19.8	70 × 265 1.240	9
31-10521	LKT 20-525-DP	3 x 77.0	3.8 4.6	6.5 7.8	11.6 13.9	12.5 15.0	14.1 16.9	16.7 20.1	20.0 24.0	22.0 26.4	85 × 278 1.900	4
31-10446	LKT 21.6-525-DP	3 x 83.2	4.1 4.9	7.0 8.4	12.5 15.0	13.5 16.2	15.2 18.2	18.1 21.7	21.6 25.9	23.8 28.6	85 × 278 1.900	4
31-10519	LKT 25-525-DP	3 x 96.2	4.8 5.8	8.2 9.8	14.5 17.4	15.6 18.8	17.6 21.1	20.9 25.1	25.0 30.0	27.5 33.0	85 × 278 1.900	4
31-10444	LKT 28.7-525-DP	3 x 110.5	5.5 6.6	9.4 11.3	16.7 20.0	18.0 21.6	20.2 24.2	24.0 28.8	28.7 34.4	31.6 37.9	85 × 320 2.200	4

Subject to technical changes / © FRAKO GmbH / www.frako.com

تسلاکالا
021-9102 6126 | teslakala.com

Standard Capacitors (three-phase, V_N: 600 V...800 V)
Type LKT…-DP for 50 Hz / 60 Hz

Article-No.	Type	Capacitance [µF]	Rated Reactive Power in kvar at Rated Voltage (V_N) 50 Hz / 60 Hz							Rated current at V_N 50 Hz / 60 Hz [A]	Dimensions (d x h) Weight (net) [mm] [kg]	Packing Unit (pcs.)
			525 V	570 V	600 V	615 V	690 V	760 V	800 V			
31-10802	LKT 5.5-600-DP	3 x 16.1	4.2 5.0	4.9 5.9	5.5 6.6					5.3 6.3	60 × 225 0.840	9
31-10803	LKT 7.7-600-DP	3 x 22.7	5.9 7.1	7.0 8.3	7.7 9.2					7.4 8.9	60 × 225 0.840	9
31-10804	LKT 10-600-DP	3 x 29.6	7.7 9.2	9.1 10.9	10.0 12.0					9.7 11.6	70 × 225 1.090	9
31-10805	LKT 10.9-600-DP	3 x 32.1	8.4 10.0	9.8 11.8	10.9 13.1					10.5 12.6	70 × 225 1.090	9
31-10560	LKT 5-690-DP	3 x 11.1	2.9 3.5	3.4 4.1	3.8 4.5	4.0 4.8	5.0 6.0			4.2 5.0	60 × 225 0.840	9
31-10561	LKT 10-690-DP	3 x 22.3	5.8 7.0	6.8 8.2	7.6 9.1	7.9 9.5	10.0 12.0			8.4 10.0	70 × 225 1.090	9
31-10562	LKT 12.5-690-DP	3 x 27.9	7.2 8.7	8.5 10.2	9.5 11.3	9.9 11.9	12.5 15.0			10.5 12.6	70 × 265 1.240	9
31-10563	LKT 15-690-DP	3 x 33.4	8.7 10.4	10.2 12.3	11.3 13.6	11.9 14.3	15.0 18.0			12.6 15.1	70 × 265 1.240	9
31-10564	LKT 20-690-DP	3 x 44.6	11.6 13.9	13.7 16.4	15.1 18.2	15.9 19.1	20.0 24.0			16.7 20.1	85 × 278 1.900	4
31-10565	LKT 25-690-DP	3 x 55.7	14.5 17.4	17.1 20.5	18.9 22.7	19.9 23.8	25.0 30.0			20.9 25.1	85 × 278 1.900	4
31-10569	LKT 28.2-760-DP	3 x 51.8	13.5 16.1	15.9 19.0	17.6 21.1	18.5 22.2	23.2 27.9	28.2 33.8		21.4 25.7	85 × 320 2.200	4
31-10570	LKT 6.7-800-DP	3 x 11.1	2.9 3.5	3.4 4.1	3.8 4.5	4.0 4.8	5.0 6.0	6.0 7.3	6.7 8.0	4.8 5.8	60 × 225 0.840	9
31-10571	LKT 10.5-800-DP	3 x 17.4	4.5 5.4	5.3 6.4	5.9 7.1	6.2 7.5	7.8 9.4	9.5 11.4	10.5 12.6	7.6 9.1	70 × 225 1.090	9
31-10572	LKT 13.3-800-DP	3 x 22.0	5.7 6.9	6.8 8.1	7.5 9.0	7.9 9.4	9.9 11.9	12.0 14.4	13.3 16.0	9.6 11.5	85 × 215 1.550	4
31-10573	LKT 21-800-DP	3 x 34.8	9.0 10.9	10.7 12.8	11.8 14.2	12.4 14.9	15.6 18.8	19.0 22.7	21.0 25.2	15.2 18.2	85 × 278 1.900	4
31-10574	LKT 26.7-800-DP	3 x 44.3	11.5 13.8	13.6 16.3	15.0 18.0	15.8 18.9	19.9 23.8	24.1 28.9	26.7 32.0	19.3 23.1	85 × 320 2.200	4

Standard Capacitors (single-phase, V_N: 280 V...525 V)
Type LKT…-EP for 50 Hz / 60 Hz

Article-No.	Type	Capacitance [µF]	Rated Reactive Power in kvar at Rated Voltage (V_N) 50 Hz / 60 Hz							Rated current at V_N 50 Hz / 60 Hz [A]	Dimensions (d x h) Weight (net) [mm] [kg]	Packing Unit (pcs.)
			230 V	280 V	400 V	415 V	440 V	480 V	525 V			
31-10547	LKT 5-280-EP	1 x 203.7	3.4 4.1	5.0 6.0						17.9 21.5	60 × 138 0.530	9
31-10548	LKT 10-280-EP	1 x 407.4	6.8 8.1	10.0 12.0						35.8 43.0	85 × 131 1.200	4
31-10526	LKT 3.33-440-EP	1 x 54.8	0.9 1.1	1.4 1.6	2.8 3.3	3.0 3.6	3.33 4.0			7.6 9.1	60 × 90 0.355	9
31-10527	LKT 4.17-440-EP	1 x 68.6	1.1 1.4	1.7 2.0	3.4 4.1	3.7 4.5	4.17 5.0			9.5 11.4	60 × 138 0.530	9
31-10528	LKT 5-440-EP	1 x 82.2	1.4 1.6	2.0 2.4	4.1 5.0	4.4 5.33	5.0 6.0			11.4 13.6	60 × 138 0.530	9

تسلاکالا
021-9102 6126 | teslakala.com

Article-No.	Type	Capacitance [µF]	Rated Reactive Power in kvar at Rated Voltage (V_N) 50 Hz / 60 Hz							Rated current at V_N 50 Hz / 60 Hz [A]	Dimensions (d x h) Weight (net) [mm] [kg]	Packing Unit (pcs.)
			230 V	280 V	400 V	415 V	440 V	480 V	525 V			
31-10384	LKT 9.4-440-EP	1 x 154.6	2.6 3.1	3.6 4.3	7.8 9.3	8.4 10.0	9.4 11.3			21.4 25.6	70 × 153 0.680	9
31-10529	LKT 2.4-480-EP	1 x 33.2	0.6 0.7	0.8 1.0	1.7 2.0	1.8 2.15	2.0 2.4	2.4 2.9		5.0 6.0	60 × 90 0.355	9
31-10530	LKT 3.33-480-EP	1 x 46.0	0.8 0.9	1.1 1.4	2.3 2.8	2.5 3.0	2.8 3.4	3.33 4.0		6.9 8.3	60 × 90 0.355	9
31-10531	LKT 3.6-480-EP	1 x 49.7	0.8 1.0	1.2 1.5	2.5 3.0	2.7 3.2	3.0 3.6	3.6 4.3		7.5 9.0	60 × 138 0.530	9
31-10515	LKT 4.8-480-EP	1 x 66.3	1.1 1.3	1.6 2.0	3.33 4.0	3.6 4.3	4.0 4.8	4.8 5.8		10.0 12.0	60 × 138 0.530	9
31-10514	LKT 6-480-EP	1 x 82.9	1.4 1.7	2.0 2.5	4.17 5.0	4.5 5.4	5.0 6.0	6.0 7.2		12.5 15.0	60 × 138 0.530	9
31-10532	LKT 2.8-525-EP	1 x 32.3	0.5 0.6	0.8 1.0	1.6 1.9	1.7 2.1	2.0 2.4	2.3 2.8	2.8 3.4	5.3 6.4	60 × 90 0.355	9
31-10533	LKT 3.33-525-EP	1 x 38.5	0.6 0.8	1.0 1.1	1.9 2.3	2.1 2.5	2.3 2.8	2.8 3.3	3.33 4.0	6.3 7.6	60 × 138 0.530	9
31-10385	LKT 8.33-525-EP	1 x 96.2	1.6 1.9	2.4 2.9	4.8 5.8	5.2 6.3	5.9 7.0	7.0 8.33	8.33 10.0	15.9 19.0	70 × 153 0.680	9

Heavy Duty Capacitors (three-phase, V_N: 480 V...525 V)
Typ LKT…-HD for 50 Hz / 60 Hz

Article-No.	Type	Capacitance [µF]	Rated Reactive Power in kvar at Rated Voltage (V_N) 50 Hz / 60 Hz							Rated current at V_N 50 Hz / 60 Hz [A]	Dimensions (d x h) Weight (net) [mm] [kg]	Packing Unit (pcs.)
			400 V	415 V	440 V	460 V	480 V	500 V	525 V			
31-10580	LKT 16.8-480-HD	3 x 77.4	11.7 14.0	12.6 15.1	14.1 16.9	15.4 18.5	16.8 20.2			20.2 24.2	85 × 215 1.550	4
31-10581	LKT 18.0-480-HD	3 x 82.9	12.5 15.0	13.5 16.2	15.1 18.2	16.5 19.8	18.0 21.6			21.7 26.0	85 × 215 1.550	4
31-10582	LKT 15.6-500-HD	3 x 66.2	10.0 12.0	10.8 12.9	12.1 14.5	13.2 15.8	14.4 17.3	15.6 18.7		18.0 21.6	85 × 215 1.550	4
31-10583	LKT 16.1-500-HD	3 x 68.3	10.3 12.4	11.1 13.3	12.5 15.0	13.6 16.4	14.8 17.8	16.1 19.3		18.6 22.3	85 × 215 1.550	4
31-10584	LKT 16.8-500-HD	3 x 71.3	10.8 12.9	11.6 13.9	13.0 15.6	14.2 17.1	15.5 18.6	16.8 20.2		19.4 23.3	85 × 215 1.550	4
31-10585	LKT 18.0-525-HD	3 x 69.3	10.5 12.5	11.3 13.5	12.6 15.2	13.8 16.6	15.1 18.1	16.3 19.6	18.0 21.6	19.8 23.8	85 × 215 1.550	4

Subject to technical changes / © FRAKO GmbH / www.frako.com

تسلاکالا
021-9102 6126 | teslakala.com

Dimensions

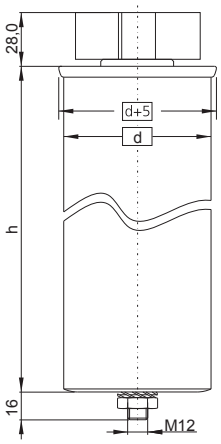

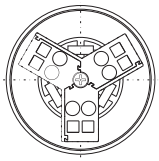

Three-phase capacitor with d = 60/70 mm
Spring tension terminal AKD 25/3 for 2 × 6 mm²

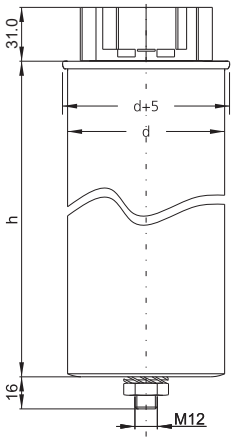



Three-phase capacitor with d = 85 mm
Spring tension terminal AKD 30/3 for 16 mm²

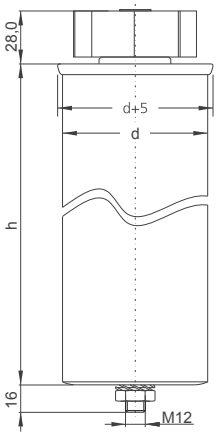

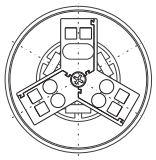

Single-phase capacitor with d = 60/70 mm
Spring tension terminal AKD 25/2 for 2 × 6 mm²

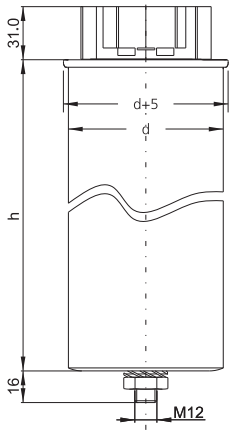

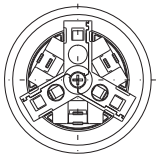

Single-phase capacitor with d = 85 mm
Spring tension terminal AKD 30/2 for 16 mm²

تسلاکالا
021-9102 6126 | teslakala.com

Subject to technical changes / © FRAKO GmbH / www.frako.com

تسلاکالا
021-9102 6126 | teslakala.com



IEC 61071 cULus

LKT-F
Power Electronics Capacitors

**FRAKO Type LKT-F capacitors are power electronic capacitors which are designed specifically for use with non-sinusoidal voltage and current including Pulse Width Modulated (PWM) voltage.
Type LKT-F capacitors may be used in various types of filters for use at the input or output side of inverters and drives. They may be applied in either DC (V_N ratings) or AC (V_{rms} ratings) filter circuits.**

FRAKO power electronics capacitors type LKT-F are manufactured using a unique dry technology. Up to three capacitor coils made of low-loss metallized polypropylene are connected inside the cylindrical aluminum housing with M12 mounting bolts to form the finished capacitor. In addition to a PCB-free, flame-retardant, mineral filling material, an adhesive stabilizer is used. The electrical connection is made via the finger-safe connecting terminal (AKD), which, through the proven spring clamp technology, establishes a maintenance-free connection to the connecting cables or via the screw connection. The use of strictly tested materials and careful processing guarantee quality and a long product lifespan.

FRAKO manufactures its power electronics capacitors according to in-house specifications that far exceed applicable standards. Quality inspections after each production stage ensure a high-quality end product. Due to the high quality standards and special manufacturing technology, FRAKO power electronics capacitors achieve an above-average lifespan. At the end of the production process, each capacitor undergoes a special test. The internal requirements for this test significantly exceed the standard specifications for routine tests. Capacitors developed and produced at the company's location in Teningen, Germany, ensure consistently high quality, operational safety, and a long lifespan.

Applications

- Grid-tied inverters / filters
- Renewable energy systems
- Drives with Active Front Ends
- PWM sine wave filters
- L-C-L Filters for active front ends
- Power converters
- Power electronic filters
- Input harmonic filters
- Output filters at power converters
- VFD sine wave filters

تسلاکالا
021-9102 6126 | teslakala.com

LKT 3-PHASE DRY-TYPE CAPACITORS

Construction Detail

FRAKO produces AC Power Capacitors using their unique Dry-Type construction to provide high reliability in rigorous applications of power factor PWM harmonic filters and other power electronic filter systems. For best capacitor performance and longest life expectancy, FRAKO combines optimized winding construction for low internal heating with unique heat removal techniques.

3-phase capacitor

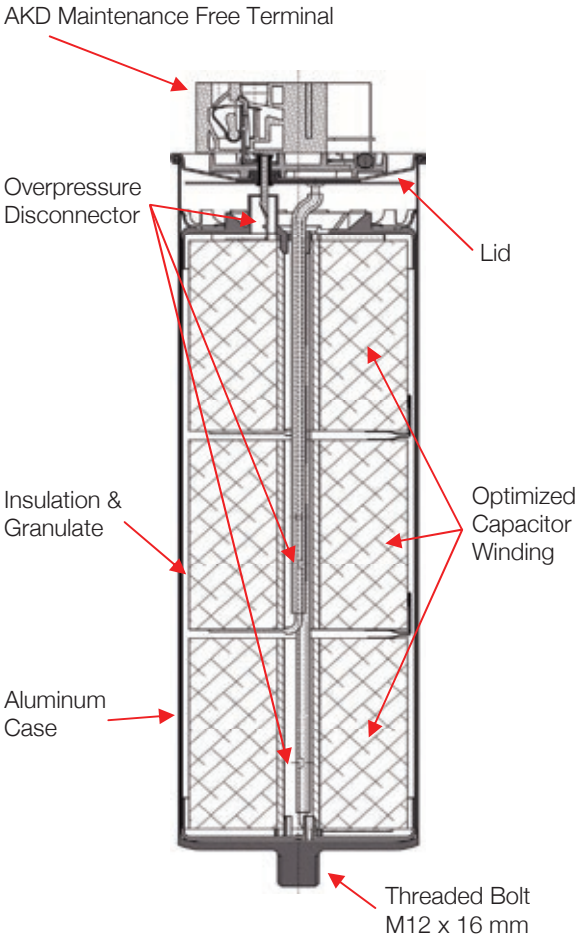

1-phase capacitor

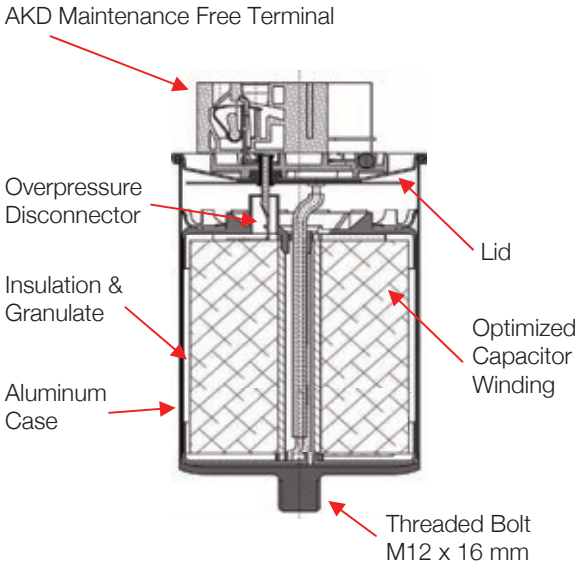

Optimized Winding Geometry

FRAKO produces capacitor windings using relatively short coils with moderate diameters because this coil geometry is known to generate much less internal heat than other winding construction methods.

Self-healing Polypropylene Film

Its self-healing property ensures that the dielectric film automatically isolates any puncturing that may occur.

Absorbent Granulate

FRAKO capacitors are filled with dry absorbent granulate to assure the absence of liquid (oil), for heat dissipation and for improved safety by enabling overpressure disconnection to occur at lower internal pressure.

Standard Features that exceed Industry Standards

- No Leak, Dry-Type Construction
- Factory Installed Discharge Resistors
- Finger-Safe Maintenance Free Terminals
- Compact Design
- High Current Capability
- Handles Harmonic Current
- High Temperature Rating
- Fourfold Safety Features
- Handles High Altitude
- Horizontal or vertical mounting

Subject to technical changes / © FRAKO GmbH / www.frako.com

تسلاکالا
021-9102 6126 | teslakala.com

Safer, Stronger capacitors for power electronics
Reliability and long life expectancy for filter applications

FRAKO produces Power Electronic Capacitors using their unique Dry-Type construction to provide high reliability in rigorous applications including a variety of PWM inverter filters. Use FRAKO's LKT-F Type capacitors in applications where a DC bus voltage is repetively switched using pulse width modulation (PWM).

Stronger because:

- Voltage ratings based upon DC bus voltage
- High continuous current ratings
- 55 °C surrounding air temperature capability
- Lifetime, maintenance-free terminals
- Optional bolt-on terminals



55 °C refers to surrounding air temperature (inside of enclosure and next to capacitor).

85 mm diameter capacitors

- 1 wire per phase
- 14 AWG to 6 AWG
- Wire stripping length is 16 mm

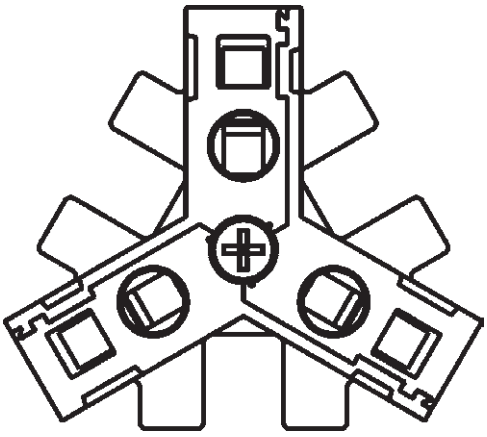



Suitable for 14 to 6 AWG stranded or fine stranded (CU) copper wires

60 mm and 70 mm diameter capacitors

- 1 or 2 wires per phase
- 16 AWG to 10 AWG
- Wire stripping length is 13 mm

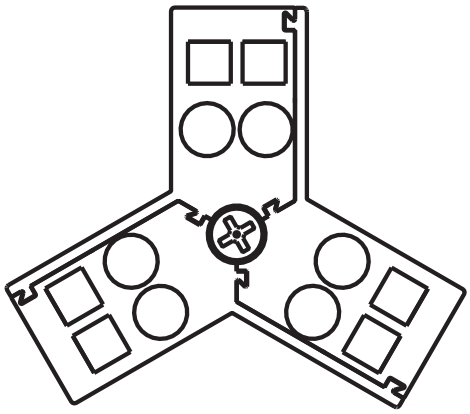



Suitable for 16 to 10 AWG stranded or fine stranded (CU) copper wires

تسلاکالا
021-9102 6126 | teslakala.com

- 4000 meter altitude capability

GENERAL TECHNICAL DATA

Design

Construction	Dry type
Dielectric	Segmented Self-Healing Metallized Polypropylene film
Impregnation	Dry type with slight film of oil on windings and dry absorbent granulate filler
Contact	Solder-free connections with contact rings
Over-Pressure (OP) Disconnection	All 3-phases disconnect under over-pressure condition
Case	Aluminum cylindrical case with 12 mm mounting stud
Terminals	Fast-wiring screwless terminal or bolt-on terminals
Discharge resistors	Factory installed (only for capacitors with fast-wiring screwless terminals)

Agency Approvals

UL symbol and number: UL 810, IEC/EN 60831-1 and -2

Electrical data

$V_{B/B}$	$1.5*U_N$ +10 % for 2 sec.
$V_{B/G}$	V_{rms} < 690 V = 3.9 kV, V_{rms} > 690 V = 4.3 kV
V_i	1.3 kV or 1.5 kV
Endurance test / thermal stability	Acc. to IEC 61071
Capacitance tolerance	± 5 %, closer tolerances on request
Loss factor tan δ_0	2×10^{-4}
Self inductance	< 300 nH

Ambient conditions

Min. temperature	- 40 °C
Max. ambient temperature	55 °C
Max. case temperature	75 °C
Max. humidity	95 %
Max. site altitude	4 000 m
Min. max. storage temperature	- 40 °C – 85 °C
Service life	>100 000 h (typical)
Failure rate	< 300 FIT

Subject to technical changes / © FRAKO GmbH / www.frako.com

تسلاکالا
021-9102 6126 | teslakala.com

LKT DRY-TYPE CAPACITORS FOR POWER ELECTRONICS

Type		LKT-F (1-phase)	LKT-F (3-phase)
Safety Features		Self-healing polypropylene film, segmented metallized film All phases overpressure disconnector, Solder-free contact rings	
Applicable Standards		UL 810, IEC/EN 60831-1 and -2	
Agency Approvals		c UL us UL Nr. 810 E 337088	
Rated Voltage	$V_{DC\text{-}bus}$	680, 850, 1.080, 1.200 (V_{pk})	450, 680, 1.080 (V_{pk})
Rated Voltage	V_{rms}	480, 600, 760, 850 V_{rms}	320, 480, 760 V_{rms}
Rated Frequency	f_N	50 Hz or 60 Hz	
Tolerance (µF)		-5 %/+5 % standard (closer tolerances upon request)	
Internal Connection		n / a	delta
Loss Factor		< 10 × 10^{-4}	
Self Inductance		< 300 nH	
Discharge (resistors factory installed)		≤ 50 V, within 60 seconds	
Temporary Overvoltage		110 % V_{max}, 8 hours per day 115 % V_{max}, 30 minutes per day 120 % V_{max}, 5 minutes 130 % V_{max}, 1 minute	
Other Routine Tests		Case seal test, capacitance, loss factor and resistance measurement	
Ambient Temperature		-40 °C bis 55 °C (continuous rating))	
Case Temperature		75 °C maximum allowable	
Storage Temperature		Minimum -40 °C to maximum 85 °C	
Humidity (max.)		95 % non-condensating	
Altitude (max.)		4.000 meters above sea level	
Life Expectancy		> 100.000 hours	
Mounting and Fixing		Vertical or horizontal by M12 × 16 mm stud (15 Nm tightening torque)	
Terminals		Patented maintenance free, fast-wiring screwless terminals are standard Bolt-on terminals upon request	

*Other voltages available upon request

Why do LKT-F Capacitors have both DC and AC Voltage Ratings?

FRAKO AC and DC ratings are based on a voltage relationship where Vdc is 1.414 × Vac-rms. In many filter applications, the peak AC system voltage is 1.414 times the DC bus voltage. However, some filter applications involve inverters with DC bus voltage higher than this (ie: 1.5-1.75 × Vac-rms). The capacitor voltage ratings must always satisfy both the AC and DC voltage levels.

Capacitance Measurement (+/-5%)

3-phase: Internal windings are connected in delta configuration. Capacitance from terminal to terminal will therefore read as 1.5 times the nominal capacitance value.
Ex: 3 × 20 µF will measure as 30 µF
1-phase: Terminal-to-terminal capacitance should measure as per rated capacitance.

تسلاکالا
021-9102 6126 | teslakala.com

1-PHASE CAPACITORS WITH BOLT-ON TERMINALS

Four-Fold safety Features:

1) Self-healing film
2) Segmented film
3) All-phase over-pressure disconnection
4) Solder-free contact ring

c UL us IEC 61071



Type List 1-phase

	V_N = 680 V									
	Article-No.	Type	Capacitance in µF	I_{max} in A	Î in kA	R_{th} in K / W	R_S in mΩ	Diameter in mm	Height in mm	Weight in kg
	31-13200	LKT-F-010.0-1-680-CA	1 × 10	15	0.5	≤ 6.30	3.15	60	121	0.380
V_{rms}= 480 V	31-13201	LKT-F-015.0-1-680-CA	1 × 15	15	0.8	≤ 6.30	2.30	60	121	0.380
	31-13202	LKT-F-020.0-1-680-CA	1 × 20	15	1.0	≤ 6.30	1.85	60	121	0.380
	31-13203	LKT-F-025.0-1-680-CA	1 × 25	15	1.3	≤ 6.30	1.60	60	121	0.380
V_S = 680 V	31-13204	LKT-F-035.0-1-680-CB	1 × 35	22	1.8	≤ 4.70	3.30	60	169	0.550
	31-13205	LKT-F-045.0-1-680-CB	1 × 45	22	2.4	≤ 4.70	2.75	60	169	0.550
	31-13225	LKT-F-050.0-1-680-CH	1 × 50	40	1.5	≤ 2.00	1.45	85	160	1.230
V_{dc} = 680 V	31-13226	LKT-F-060.0-1-680-CH	1 × 60	40	1.8	≤ 2.00	1.25	85	160	1.230
	31-13227	LKT-F-070.0-1-680-CH	1 × 70	40	2.1	≤ 2.00	1.10	85	160	1.230
	31-13228	LKT-F-095.0-1-680-CI	1 × 95	45	2.9	≤ 1.60	1.55	85	192	1.230
	31-13229	LKT-F-105.0-1-680-CI	1 × 105	45	3.2	≤ 1.60	1.45	85	192	1.230
	31-13230	LKT-F-120.0-1-680-CI	1 × 120	45	3.6	≤ 1.60	1.30	85	192	1.230

Type List 1-phase

	V_N = 850 V									
	Article-No.	Type	Capacitance in µF	I_{max} in A	Î in kA	R_{th} in K / W	R_S in mΩ	Diameter in mm	Height in mm	Weight in kg
	31-13206	LKT-F-010.0-1-850-CA	1 × 10	15	0.7	≤ 6.30	1.60	60	121	0.380
V_{rms}= 680 V	31-13207	LKT-F-015.0-1-850-CA	1 × 15	15	1.0	≤ 6.30	1.25	60	121	0.380
	31-13208	LKT-F-020.0-1-850-CA	1 × 20	15	1.3	≤ 6.30	1.10	60	121	0.380
	31-13209	LKT-F-025.0-1-850-CB	1 × 25	22	1.6	≤ 4.70	2.35	60	169	0.550
V_S = 850 V	31-13210	LKT-F-035.0-1-850-CB	1 × 35	22	2.3	≤ 4.70	1.90	60	169	0.550
	31-13231	LKT-F-045.0-1-850-CH	1 × 45	40	1.7	≤ 2.00	0.85	85	160	1.230
	31-13232	LKT-F-050.0-1-850-CH	1 × 50	40	1.9	≤ 2.00	0.80	85	160	1.230
V_{dc} = 850 V	31-13233	LKT-F-060.0-1-850-CH	1 × 60	40	2.3	≤ 2.00	0.70	85	160	1.230
	31-13234	LKT-F-068.0-1-850-CH	1 × 68	40	2.6	≤ 2.00	0.65	85	160	1.230
	31-13235	LKT-F-095.0-1-850-CI	1 × 95	45	3.6	≤ 1.60	0.80	85	192	1.230
	31-13236	LKT-F-120.0-1-850-CJ	1 × 120	50	4.5	≤ 1.60	0.70	85	244	1.580

Capacitor catalog numbers include the peak voltage rating (LKT-F-xxx.x-x-**680**-xx). If using in a PWM application where a DC voltage is switched, capacitor peak voltage rating must be equal to or greater than DC bus voltage.

Subject to technical changes / © FRAKO GmbH / www.frako.com

تسلاکالا
021-9102 6126 | teslakala.com

1-PHASE CAPACITORS WITH BOLT-ON TERMINALS

Four-Fold safety Features:

1) Self-healing film
2) Segmented film
3) All-phase over-pressure disconnection
4) Solder-free contact ring

c UL us IEC 61071



Type List 1-phase

	V_N = 1080 V			V_{rms} = 760 V			V_S = 2320 V			
	Article-No.	Type	Capacitance in µF	I_{max} in A	Î in kA	R_{th} in K / W	R_S in mΩ	Diameter in mm	Height in mm	Weight in kg
V_{rms}= 760 V	31-13211	LKT-F-010.0-1-1080-CA	1 × 10	15	0.8	≤ 6.30	1.40	60	121	0.380
	31-13212	LKT-F-015.0-1-1080-CB	1 × 15	22	1.2	≤ 4.70	2.75	60	169	0.550
	31-13213	LKT-F-020.0-1-1080-CB	1 × 20	22	1.7	≤ 4.70	2.25	60	169	0.550
V_S = 1080 V	31-13214	LKT-F-025.0-1-1080-CN	1 × 25	28	2.1	≤ 4.70	2.00	70	163	0.670
	31-13237	LKT-F-035.0-1-1080-CH	1 × 35	40	1.7	≤ 2.00	0.80	85	160	1.230
	31-13238	LKT-F-045.0-1-1080-CI	1 × 45	45	2.1	≤ 1.60	1.20	85	192	1.230
V_{dc} = 1080 V	31-13239	LKT-F-050.0-1-1080-CI	1 × 50	45	2.4	≤ 1.60	1.10	85	192	1.230
	31-13240	LKT-F-060.0-1-1080-CJ	1 × 60	50	2.9	≤ 1.60	1.05	85	244	1.580
	31-13241	LKT-F-070.0-1-1080-CJ	1 × 70	50	3.3	≤ 1.60	0.90	85	244	1.580

Type List 1-phase

	V_N = 1200 V			V_{rms} = 850 V			V_S = 2580 V			
	Article-No.	Type	Capacitance in µF	I_{max} in A	Î in kA	R_{th} in K / W	R_S in mΩ	Diameter in mm	Height in mm	Weight in kg
	31-13215	LKT-F-001.0-1-1200-CA	1 × 1	15	0.1	≤ 6.30	7.00	60	121	0.380
	31-13216	LKT-F-001.5-1-1200-CA	1 × 1.5	15	0.1	≤ 6.30	4.90	60	121	0.380
	31-13217	LKT-F-002.2-1-1200-CA	1 × 2.2	15	0.2	≤ 6.30	3.95	60	121	0.380
V_{rms}= 850 V	31-13218	LKT-F-003.0-1-1200-CA	1 × 3	15	0.3	≤ 6.30	3.05	60	121	0.380
	31-13219	LKT-F-003.3-1-1200-CA	1 × 3.3	15	0.3	≤ 6.30	2.85	60	121	0.380
	31-13220	LKT-F-004.5-1-1200-CA	1 × 4.5	15	0.4	≤ 6.30	2.25	60	121	0.380
V_S = 1200 V	31-13221	LKT-F-006.8-1-1200-CA	1 × 6.8	15	0.6	≤ 6.30	1.70	60	121	0.380
	31-13222	LKT-F-007.1-1-1200-CA	1 × 7.1	15	0.7	≤ 6.30	1.65	60	121	0.380
	31-13223	LKT-F-010.0-1-1200-CB	1 × 10	22	0.9	≤ 4.70	3.45	60	169	0.550
V_{dc} = 1200 V	31-13224	LKT-F-015.0-1-1200-CB	1 × 15	22	1.4	≤ 4.70	2.60	60	169	0.550
	31-13242	LKT-F-020.0-1-1200-CH	1 × 20	40	1.1	≤ 2.00	1.15	85	160	1.230
	31-13243	LKT-F-025.0-1-1200-CH	1 × 25	40	1.3	≤ 2.00	0.95	85	160	1.230
	31-13244	LKT-F-035.0-1-1200-CH	1 × 35	40	1.9	≤ 2.00	0.80	85	160	1.230
	31-13245	LKT-F-045.0-1-1200-CI	1 × 45	45	2.4	≤ 1.60	1.10	85	160	1.230
	31-13246	LKT-F-050.0-1-1200-CI	1 × 50	45	2.7	≤ 1.60	1.05	85	192	1.230
	31-13247	LKT-F-060.0-1-1200-CJ	1 × 60	50	3.2	≤ 1.60	0.95	85	244	1.580

Capacitor catalog numbers include the peak voltage rating (LKT-F-xxx.x-x-**680**-xx). If using in a PWM application where a DC voltage is switched, capacitor peak voltage rating must be equal to or greater than DC bus voltage.

تسلاکالا
021-9102 6126 | teslakala.com

1-PHASE CAPACITORS
WITH FAST-WIRING SCREWLESS TERMINALS

Four-Fold safety Features:

1) Self-healing film
2) Segmented film
3) All-phase over-pressure disconnection
4) Solder-free contact ring

Fast-wiring, maintenance free and anti-vibration connections.

c UL us IEC 61071



Type List 1-phase

	V_N = 680 V			V_{rms} = 480 V			V_S = 1450 V			
	Article-No.	Type	Capacitance in µF	I_{max} in A	Î in kA	R_{th} in K / W	R_S in mΩ	Diameter in mm	Height in mm	Weight in kg
V_{rms}= 480 V	31-13021	LKT-F-010.0-1-680-BA	1 × 10	15	0.5	≤ 6.30	3.15	60	90	0.355
	31-13022	LKT-F-015.0-1-680-BA	1 × 15	15	0.8	≤ 6.30	2.30	60	90	0.355
	31-13023	LKT-F-020.0-1-680-BA	1 × 20	15	1.0	≤ 6.30	1.85	60	90	0.355
	31-13024	LKT-F-025.0-1-680-BA	1 × 25	15	1.3	≤ 6.30	1.60	60	90	0.355
	31-13025	LKT-F-035.0-1-680-BB	1 × 35	22	1.8	≤ 4.70	3.30	60	138	0.530
V_S = 680 V	31-13026	LKT-F-045.0-1-680-BB	1 × 45	22	2.4	≤ 4.70	2.75	60	138	0.530
	31-13046	LKT-F-050.0-1-680-BH	1 × 50	40	1.5	≤ 2.00	1.45	85	131	1.200
	31-13047	LKT-F-060.0-1-680-BH	1 × 60	40	1.8	≤ 2.00	1.25	85	131	1.200
V_{dc} = 680 V	31-13048	LKT-F-070.0-1-680-BH	1 × 70	40	2.1	≤ 2.00	1.10	85	131	1.200
	31-13049	LKT-F-095.0-1-680-BI	1 × 95	45	2.9	≤ 1.60	1.55	85	163	1.200
	31-13050	LKT-F-105.0-1-680-BI	1 × 105	45	3.2	≤ 1.60	1.45	85	163	1.200
	31-13051	LKT-F-120.0-1-680-BI	1 × 120	45	3.6	≤ 1.60	1.30	85	163	1.200

Type List 1-phase

	V_N = 850 V			V_{rms} = 600 V			V_S = 1800 V			
	Article-No.	Type	Capacitance in µF	I_{max} in A	Î in kA	R_{th} in K / W	R_S in mΩ	Diameter in mm	Height in mm	Weight in kg
	31-13027	LKT-F-010.0-1-850-BA	1 × 10	15	0.7	≤ 6.30	1.60	60	90	0.355
	31-13028	LKT-F-015.0-1-850-BA	1 × 15	15	1.0	≤ 6.30	1.25	60	90	0.355
	31-13029	LKT-F-020.0-1-850-BA	1 × 20	15	1.3	≤ 6.30	1.10	60	90	0.355
V_{rms}= 600 V	31-13030	LKT-F-025.0-1-850-BB	1 × 25	22	1.6	≤ 4.70	2.35	60	138	0.530
	31-13031	LKT-F-035.0-1-850-BB	1 × 35	22	2.3	≤ 4.70	1.90	60	138	0.530
	31-13052	LKT-F-045.0-1-850-BH	1 × 45	40	1.7	≤ 2.00	0.85	85	131	1.200
V_S = 850 V	31-13053	LKT-F-050.0-1-850-BH	1 × 50	40	1.9	≤ 2.00	0.80	85	131	1.200
	31-13054	LKT-F-060.0-1-850-BH	1 × 60	40	2.3	≤ 2.00	0.70	85	131	1.200
	31-13055	LKT-F-068.0-1-850-BH	1 × 68	40	2.6	≤ 2.00	0.65	85	131	1.200
V_{dc} = 850 V	31-13056	LKT-F-095.0-1-850-BI	1 × 95	45	3.6	≤ 1.60	0.80	85	163	1.200
	31-13057	LKT-F-120.0-1-850-BJ	1 × 120	50	4.5	≤ 1.60	0.70	85	215	1.550

Capacitor catalog numbers include the peak voltage rating (LKT-F-xxx.x-x-**680**-xx). If using in a PWM application where a DC voltage is switched, capacitor peak voltage rating must be equal to or greater than DC bus voltage.

Subject to technical changes / © FRAKO GmbH / www.frako.com

تسلاکالا
021-9102 6126 | teslakala.com

1-PHASE CAPACITORS
WITH FAST-WIRING SCREWLESS TERMINALS

Four-Fold safety Features:

1) Self-healing film
2) Segmented film
3) All-phase over-pressure disconnection
4) Solder-free contact ring

Fast-wiring, maintenance free and anti-vibration connections.

c UL us IEC 61071



Type List 1-phase

	V_N = 1080 V			V_{rms} = 760 V			V_S = 2320 V			
	Article-No.	Type	Capacitance in µF	I_{max} in A	Î in kA	R_{th} in K / W	R_S in mΩ	Diameter in mm	Height in mm	Weight in kg
V_{rms}= 760 V	31-13032	LKT-F-010.0-1-1080-BA	1 × 10	15	0.8	≤ 6.30	1.40	60	90	0.355
	31-13033	LKT-F-015.0-1-1080-BB	1 × 15	22	1.2	≤ 4.70	2.75	60	138	0.530
	31-13034	LKT-F-020.0-1-1080-BB	1 × 20	22	1.7	≤ 4.70	2.25	60	138	0.530
V_S = 1080 V	31-13035	LKT-F-025.0-1-1080-BN	1 × 25	28	2.1	≤ 4.70	2.00	70	138	0.650
	31-13058	LKT-F-035.0-1-1080-BH	1 × 35	40	1.7	≤ 2.00	0.80	85	131	1.200
	31-13059	LKT-F-045.0-1-1080-BI	1 × 45	45	2.1	≤ 1.60	1.20	85	163	1.200
V_{dc} = 1080 V	31-13060	LKT-F-050.0-1-1080-BI	1 × 50	45	2.4	≤ 1.60	1.10	85	163	1.200
	31-13061	LKT-F-060.0-1-1080-BJ	1 × 60	50	2.9	≤ 1.60	1.05	85	215	1.550
	31-13062	LKT-F-070.0-1-1080-BJ	1 × 70	50	3.3	≤ 1.60	0.90	85	215	1.550

Type List 1-phase

	V_N = 1200 V			V_{rms} = 850 V			V_S = 2580 V			
	Article-No.	Type	Capacitance in µF	I_{max} in A	Î in kA	R_{th} in K / W	R_S in mΩ	Diameter in mm	Height in mm	Weight in kg
	31-13036	LKT-F-001.0-1-1200-BA	1 × 1	15	0.1	≤ 6.30	7.00	60	90	0.355
	31-13037	LKT-F-001.5-1-1200-BA	1 × 1.5	15	0.1	≤ 6.30	4.90	60	90	0.355
	31-13038	LKT-F-002.2-1-1200-BA	1 × 2.2	15	0.2	≤ 6.30	3.95	60	90	0.355
V_{rms}= 850 V	31-13039	LKT-F-003.0-1-1200-BA	1 × 3	15	0.3	≤ 6.30	3.05	60	90	0.355
	31-13040	LKT-F-003.3-1-1200-BA	1 × 3.3	15	0.3	≤ 6.30	2.85	60	90	0.355
	31-13041	LKT-F-004.5-1-1200-BA	1 × 4.5	15	0.4	≤ 6.30	2.25	60	90	0.355
V_S = 1200 V	31-13042	LKT-F-006.8-1-1200-BA	1 × 6.8	15	0.6	≤ 6.30	1.70	60	90	0.355
	31-13043	LKT-F-007.1-1-1200-BA	1 × 7.1	15	0.7	≤ 6.30	1.65	60	90	0.355
	31-13044	LKT-F-010.0-1-1200-BB	1 × 10	22	0.9	≤ 4.70	3.45	60	138	0.530
V_{dc} = 1200 V	31-13045	LKT-F-015.0-1-1200-BB	1 × 15	22	1.4	≤ 4.70	2.60	60	138	0.530
	31-13063	LKT-F-020.0-1-1200-BH	1 × 20	40	1.1	≤ 2.00	1.15	85	131	1.200
	31-13064	LKT-F-025.0-1-1200-BH	1 × 25	40	1.3	≤ 2.00	0.95	85	131	1.200
	31-13065	LKT-F-035.0-1-1200-BH	1 × 35	40	1.9	≤ 2.00	0.80	85	131	1.200
	31-13066	LKT-F-045.0-1-1200-BI	1 × 45	45	2.4	≤ 1.60	1.10	85	163	1.200
	31-13067	LKT-F-050.0-1-1200-BI	1 × 50	45	2.7	≤ 1.60	1.05	85	163	1.200
	31-13068	LKT-F-060.0-1-1200-BJ	1 × 60	50	3.2	≤ 1.60	0.95	85	215	1.550

Capacitor catalog numbers include the peak voltage rating (LKT-F-xxx.x-x-**680**-xx). If using in a PWM application where a DC voltage is switched, capacitor peak voltage rating must be equal to or greater than DC bus voltage.

تسلاکالا
021-9102 6126 | teslakala.com

3-PHASE CAPACITORS WITH FAST-WIRING SCREWLESS TERMINALS

Four-Fold safety Features:

1) Self-healing fi lm
2) sSegmented fi lm
3) All-phase over-pressure disconnection
4) Solder-free contact ring

Fast-wiring, maintenance free and anti-vibration connections.

c UL us IEC 61071



Type List 3-phase

	V_N = 450 V	V_{rms} = 320 V				V_S = 970 V			
	Article-No.	Type	Capacitance in µF	I_{max} in A	Î in kA	R_{th} in K / W	R_S in mΩ	Diameter in mm	Height in mm	Weight in kg
V_{rms}= 320 V	31-13000	LKT-F-020.0-3-450-BC	3 × 20	22	0.7	≤ 4.2	1.36	60	150	0.590
	31-13001	LKT-F-030.0-3-450-BC	3 × 30	22	1.0	≤ 4.2	1.10	60	150	0.590
	31-13002	LKT-F-040.0-3-450-BF	3 × 40	28	1.4	≤ 3.5	1.79	70	223	1.090
V_S = 450 V	31-13003	LKT-F-050.0-3-450-BF	3 × 50	28	1.7	≤ 3.5	1.66	70	223	1.090
	31-13004	LKT-F-075.0-3-450-BF	3 × 75	28	2.6	≤ 3.5	1.49	70	223	1.090
	31-13011	LKT-F-100.0-3-450-BJ	3 × 100	45	3.5	≤ 2.9	0.57	85	215	1.550
U_{dc} = 450 V	31-13012	LKT-F-135.0-3-450-BK	3 × 135	50	4.7	≤ 2.6	0.80	85	278	1.900
	31-13013	LKT-F-150.0-3-450-BK	3 × 150	50	5.2	≤ 2.6	0.77	85	278	1.900

Type List 3-phase

	V_N = 680 V	V_{rms} = 480 V				V_S = 1460 V			
	Article-No.	Type	Capacitance in µF	I_{max} in A	Î in kA	R_{th} in K / W	R_S in mΩ	Diameter in mm	Height in mm	Weight in kg
V_{rms}= 480 V	31-13005	LKT-F-010.0-3-680-BC	3 × 10	22	0.5	≤ 4.2	1.38	60	150	0.590
	31-13006	LKT-F-015.0-3-680-BC	3 × 15	22	0.8	≤ 4.2	1.18	60	150	0.590
V_S = 680 V	31-13007	LKT-F-020.0-3-680-BD	3 × 20	25	1.0	≤ 3.8	1.99	60	223	0.840
	31-13014	LKT-F-030.0-3-680-BI	3 × 30	40	1.6	≤ 3.0	0.46	85	163	1.200
U_{dc} = 680 V	31-13015	LKT-F-050.0-3-680-BJ	3 × 50	45	2.6	≤ 2.9	0.63	85	215	1.550
	31-13016	LKT-F-090.0-3-680-BL	3 × 90	55	4.7	≤ 2.1	0.91	85	320	2.200

Type List 3-phase

	V_N = 1080 V	V_{rms} = 760 V				V_S = 2320 V			
	Article-No.	Type	Capacitance in µF	I_{max} in A	Î in kA	R_{th} in K / W	R_S in mΩ	Diameter in mm	Height in mm	Weight in kg
V_{rms}= 760 V	31-13008	LKT-F-005.0-3-1080-BC	3 × 5	22	0.4	≤ 4.2	1.14	60	150	0.590
	31-13009	LKT-F-010.0-3-1080-BD	3 × 10	25	0.8	≤ 3.8	1.70	60	223	0.840
V_S = 1080 V	31-13010	LKT-F-015.0-3-1080-BF	3 × 15	28	1.2	≤ 3.5	1.53	70	223	1.090
	31-13017	LKT-F-020.0-3-1080-BJ	3 × 20	45	1.7	≤ 2.9	0.58	85	215	1.550
	31-13018	LKT-F-025.0-3-1080-BK	3 × 25	50	2.1	≤ 2.6	0.83	85	278	1.900
V_{dc} = 1080 V	31-13019	LKT-F-030.0-3-1080-BK	3 × 30	50	2.5	≤ 2.6	0.77	85	278	1.900
	31-13020	LKT-F-035.0-3-1080-BL	3 × 35	55	2.9	≤ 2.1	0.88	85	320	2.200

Die Katalognummern der Kondensatoren geben auch den Wert der jeweiligen Spitzenspannung an (LKT-F-xxx.x-x-**680**-xx). Bei Verwendung in einer PWM-Anwendung, bei der eine Gleichspannung geschaltet wird, muss die Spitzenspannung des Kondensators gleich oder größer sein als die DC-Zwischenkreisspannung.

Subject to technical changes / © FRAKO GmbH / www.frako.com

تسلاکالا
021-9102 6126 | teslakala.com

REGULATIONS AND SAFETY INSTRUCTIONS

General

FRAKO capacitors are supplied ready to install, and have been submitted to thorough routine testing to assure their quality and verify their good working order before they leave our factory. Some important points must be observed to prevent injury to personnel or damage to assets when installing, commissioning and maintaining power electronics capacitors. When installing and using capacitors for power electronics, it is essential to follow and comply with the instructions given here, together with the applicable international standards, such as IEC and (in Europe) EN standards, and the relevant national codes and regulations. In Germany, for example, these are issued by the VDE (German Association for Electrical, Electronic & Information Technologies). In the USA and Canada these are issued by Underwriters Laboratories (UL), National Electrical Code (NEC) and Canadian Electrical Code (CEC). Please comply with the relevant legal requirements when recycling the packaging materials.

Safety instructions

Caution! Capacitors for power electronics operate at a dangerously high voltage that can cause loss of life. Furthermore, the capacitors are able to retain this high voltage for long periods after de-energization! All work on capacitors must therefore only be carried out by qualified electricians. Before the current-carrying parts of a capacitor are touched, they must be discharged and short-circuited by means of suitable components. The installation of power electronics capacitors and the inspection to verify their correct application may only be carried out by appropriately qualified specialists who have been instructed about the electrical hazards. Safety notices drawing attention to the potential dangers associated with power electronics capacitors must be prominently displayed. Capacitors must be installed so that any inadvertent contact with live components is completely prevented.
Before any work is done on power electronics capacitors, it must be verified that their current-carrying components are at zero potential. To achieve this, the capacitor must first be discharged and then short-circuited.
Capacitors must be permanently and securely grounded.
Low voltage, high breaking capacity (LV HBC) fuses installed in series with power electronics capacitors as short-circuit protection may only be removed or replaced when they are not carrying current. Similarly, fuse switch disconnectors installed for the same purpose may not be operated when under load, since this might produce a dangerous arc, which could cause injury and damage.
This is a life-threatening danger! Do not expose the capacitors to direct sunlight and do not locate them near to heat sources. Ensure that the capacitors are always kept within the specified range of storage and operating ambient temperatures. Temperatures outside these ranges can permanently damage the capacitors without this being visible externally.
If power electronics capacitors appear to be visibly damaged, they must not be installed, wired up or put into service.
LKT-F type power electronics capacitors are only suitable for indoor applications. They are designed for use in clean, dry, dustfree rooms at elevations 4 000 m above sea level.

Storage and operating conditions

Power electronics capacitors can be stored in a dry, dust-free, non-corrosive environment at temperatures between - 25 (- 40) and + 85 °C and elevations ≤ 4,000 m.
The capacitors are suitable for ambient temperatures of - 40 °C up to 55 °C. The ambient temperature is one of the main factors affecting power electronics capacitors and has a major impact on their service life. EN 61071 describes the conditions regarding the ambient temperature of power electronics capacitors in detail. The maximum permissible ambient humidity is 95 %, and the maximum operating elevation above sea level is 4,000 m. Power electronics capacitors must have been discharged to a voltage of less than 50 V before they are switched on again!!!

Installation

FRAKO power electronics capacitors are suitable for use indoors in a dry, dust-free, non-corrosive environment. The degree of protection (EN 600529) is IP 00 for screw terminals and IP 20 when fitted with the terminal base. The ambient temperature must not exceed the limits specified above. Each capacitor case must be spaced at least 10 mm from the next one and enclosure walls in order to ensure unrestricted circulation of air. Sources of heat, such as harmonic filter reactors, must not be installed directly adjacent to power electronics capacitors. If it is possible for hot air to accumulate at the location where the capacitors are installed, it is necessary to provide forced ventilation, for example with a fan / filter unit.
If dust is present at the location where the capacitors are installed, it must be removed from the ventilation air intake by means of filter mats. Regular maintenance and cleaning, particularly of the capacitor terminal bases, is an absolute necessity. If a layer of dust is allowed to accumulate, it can result in flashovers between conductors or from a conductor to earth!
The capacitors can be installed and will function correctly in any desired orientation. It must always be ensured, however, that they are adequately secured mechanically, especially if the capacitor bank may be transported! The enclosure for the capacitors must be provided with a reliable earth connection.

تسلاکالا
021-9102 6126 | teslakala.com

Commissioning, operation and maintenance

Before the supply voltage is applied to the system, a visual check should be carried out by a qualified technician to verify that no equipment or connections have worked loose during transport and no mechanical damage can be identified. Damaged capacitors must not be put into service. Capacitors should be checked once every year in a systematic inspection by a specialist. Make sure there is no wire insulation trapped in any of the capacitor terminals.

General

Please ensure that the capacitors are kept clean at all times, if necessary having them cleaned without delay by skilled personnel. During the annual inspection the capacitors must be given a visual check by an electrician to verify good working order (sound electrical contacts, no evidence of overheating, no blown fuses, etc.). Any variation in capacitance or distortion by harmonics can be inferred from the operating currents measured. There must always be good electrical contact at the capacitor connections, which must remain clean and dry.

KEY TO SYMBOLS

- C_N Nominal capacitance
- V_N Maximum operating peak recurrent voltage of either polarity of a reversing type waveform for which the capacitor has been designedt
- V_{rms} Root-mean-square value of the maximum recurrent operating voltage
- V_S Peak voltage induced by switching or any other disturbance of the system which is allowed for a limited number of times and for durations shorter than the basic period
- V_I Root-mean-square value of the sine wave voltage designed for the insulation between the terminals of the capacitors to the casing or earth
- $V_{B/B}$ Voltage coating / coating
- $V_{B/G}$ Voltage coating / housing
- $V_{B/B}$ Isolation voltage
- I_{max} Root-mean-square value of the maximum current in continuous operation
- $\hat{I}$ Maximum repetitive peak current that can occur for a short duration in continuous operation
- I_S Peak non-repetitive current induced by switching or any other disturbance of the system which is allowed for a limited number of times, for durations shorter than the basic period

- L_{self} Self-inductance
- R_{th} Thermal resistance
- R_S Effective ohmic resistance of a capacitor's conductors and metallic coating under specified operating conditions
- P_V Maximum power loss at which the capacitor may be operated at the maximum casing temperature
- f_1 Frequency at which the power loss of the capacitor is maximum at the nominal voltage
- f_2 Maximum frequency at which the maximum current produces the maximum power loss in the capacitor
- Θ_{min} Lowest temperature at which the capacitor may be energized
- Θ_{max} Hottest temperature of the casing at which the capacitor may be operated

Caution Notice

The capacitors used in the employed switch cabinets are predominantly made of flammable materials. Capacitors can burst, catch fire, or, in extreme cases, explode due to internal faults or external factors (e.g., excessively high ambient temperature, overvoltage, or excessive harmonics).

Thanks to the quadruple protection of our capacitor series, the inherent product-specific risk is significantly minimized. Despite these measures, there may be very rare scenarios (less than 1‰) where the internal disconnection mechanisms fail during the shutdown of a capacitor, causing the capacitor housing to open.

It is therefore essential to ensure that the installation site of the system is suitable for eliminating any potential risk to the surroundings in the event of a malfunction. FRAKO is happy to assist users in advance by providing consultation and specific application recommendations (see also the detailed explanations in “General Safety Instructions for Power Capacitors” – General Safety Instructions from manufacturers of power capacitors organized within the ZVEI).

Subject to technical changes / © FRAKO GmbH / www.frako.com

تسلاکالا
021-9102 6126 | teslakala.com

Dimensions

1 Phase capacitor with d = 60 mm (bolt-on terminal)

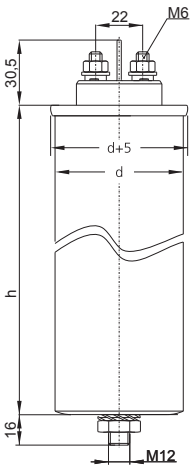



1 Phase capacitor with d = 70 mm (bolt-on terminal)

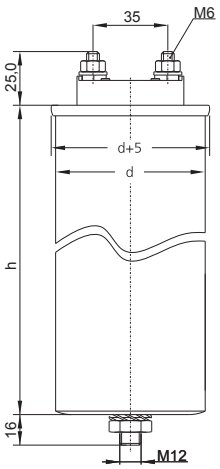

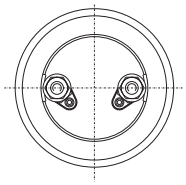

1 Phase capacitor with d = 85 mm (bolt-on terminal)

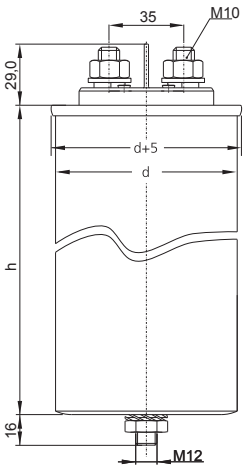

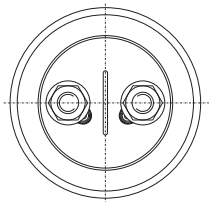

1 Phase and 3 Phase with d = 60 / 70 mm (fast-wiring screwless terminal)

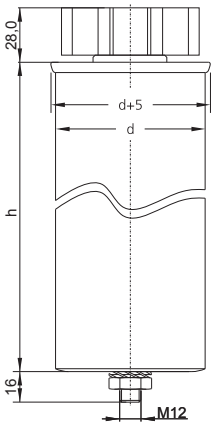

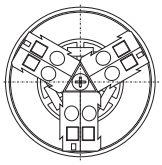

3 Phase capacitor with d = 85 mm (fast-wiring screwless terminal)

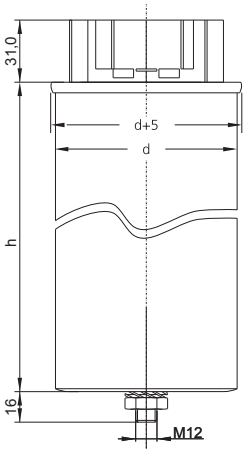

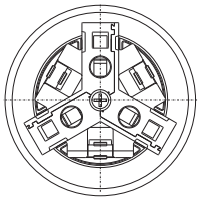

تسلاکالا
021-9102 6126 | teslakala.com

تسلاکالا
021-9102 6126 | teslakala.com



FDR / FKD
Standard Harmonic Filter Reactors

Avoiding resonances – low-loss Harmonic Filter Reactors for your power factor correction – designed for operation with FRAKO Power Capacitors.

- Power range: 3.13 to 50 kvar
- Voltage range: 230 to 690 V, 50 / 60 Hz
- Detuning factor p = 5.67 % - 14 %
- Low-loss design

Application Recommendations

Used together with LKT type Power Factor Correction Capacitors, Harmonic Filter Reactors make it possible to install detuned versions of fixed capacitor banks and Power Factor Correction Systems. This enables switchgear manufacturers to plan and manufacture customer-specific systems.

تسلاکالا
021-9102 6126 | teslakala.com

Components

Standard Harmonic Filter Reactors

Type Overview

Type series			Standard
Type			FDR / FKD
Rated voltage			230…690 V
Rated stage power			3.13…50 kvar
Rated frequency		50 / 60 Hz	• / •
Series resonance frequency	p=5.67 %	210 / 252 Hz	• / -
	p=7 %	189 / 227 Hz	• / •
	p=8 %	177 / 212 Hz	• / -
	p=14 %	134 / 160 Hz	• / -
Temperature range			-10 … +60 °C
Winding material			Al /Cu
Insulation class			F (155 °C)
Temperature switch	pre-assembled		•
	Switching temperature		140 °C
	Switching capacity		2.5A / 250 V AC
Ingress protection			IP00 according to IEC 60529
Power loss max.			6 W/kvar
Connection			Connecting cable
Catalogue page			Page 27 ff.

Series Resonance Frequency

Version	Series resonance frequency (50 Hz Mains)	Detuning factor	For mains with utility audio frequency [1]
P1	134 Hz	P= 14 %	≥ 166 Hz
P8	177 Hz	P= 8 %	≥ 217 Hz
P7	189 Hz	P= 7 %	≥ 228 Hz
P5	210 Hz	P= 5.67 %	≥ 270 Hz

[1] Utility company specifications inconsistent with the above must be taken into account.
Please also refer to the design notes given in our “Manual of Power Quality”. Further series resonance frequencies are available on request.

Connection

Coil input: U1, V1, W1
Coil output: U2, V2, W2

Important Note

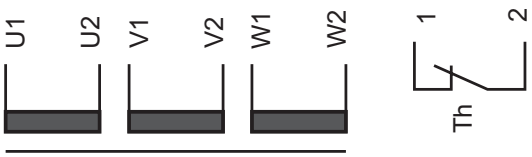

Please only use the correct number of the appropriate Power Capacitors as specified in our “Selection Aid: Harmonic Filter Reactors → Capacitors” in our Technical Annex. Apart from possibly overloading the installed components, the utility company‘s remote control systems could also be adversely affected.

Subject to technical changes / © FRAKO GmbH / www.frako.com

تسلاکالا
021-9102 6126 | teslakala.com

Technical Data

Version: P7 (Detuning factor p = 7 %), 50 Hz

Permissible harmonics EN 61000-2-4 Class 2

Article-No.	Type	Q [kvar]	I_N [A]	L [mH]	C [µF]	Size	Connection Cable [mm²]	Connection Terminal [mm²]	Weight approx. [kg]	Winding material	Al/Cu Weight [kg]
Standard Harmonic Filter Reactor - FDR/FKD - V_N = 230 V / 50 Hz - p = 7 % - fres = 189 Hz											
88-01980	FDR 5-230-P7	5.0	12.6	2.530	3 x 93.3	c	6		5.0	Cu	1.7
88-01575	FKD 10-230-P7	10.0	26.9	1.180	3 x 200.0	g	10		9.0	Cu	2.0
88-01974	FDR 12,5-230-P7	12.5	31.2	1.020	3 x 232.1	g	10		9.0	Cu	2.3
88-01583	FKD 16,7-230-P7	16.7	44.9	0.700	3 x 334.0	g	10/2x4		10.0	Cu	2.5
88-01576	FKD 20-230-P7	20.0	53.8	0.590	3 x 400.0	h	16/2x10		15.0	Cu	2.4
88-01943	FDR 25-230-P7	25.0	62.5	0.510	3 x 464.2	h	16		16.0	Cu	4.9
88-01568	FKD 33-230-P7	33.0	89.9	0.354	3 x 668.0	m	2x16/2x16		19.0	Al	3.9
Standard Harmonic Filter Reactor - FDR/FKD - V_N = 400 V / 50 Hz - p = 7 % - fres = 189 Hz											
88-01640	FKD 2,5-400-P7	2.5	3.9	14.200	3 x 16.6	c	4		5.0	Cu	0.4
88-01719	FKD 3,13-400-P7	3.1	4.7	11.900	3 x 19.9	c	4		7.0	Cu	1.0
88-01481	FKD 5-400-P7	5.0	7.8	7.120	3 x 33.2	c	4		7.0	Cu	1.1
88-01410	FKD 6,25-400-P7	6.3	9.7	5.700	3 x 41.5	c	4		7.0	Cu	1.7
88-01482	FKD 7,5-400-P7	7.5	11.6	4.760	3 x 49.7	c	4		7.0	Cu	1.6
88-01479	FKD 10-400-P7	10.0	15.5	3.550	3 x 66.3	g	4		10.0	Cu	1.5
88-01767	FDR 12,5-400-P7	12.5	18.0	3.070	3 x 77.1	g	4		10.0	Cu	2.1
88-01362	FKD 15-400-P7	15.0	23.3	2.370	3 x 99.5	h	6		15.0	Cu	2.2
88-01922	FDR 16,7-400-P7	16.7	24.1	2.300	3 x 102.9	h	6		13.0	Cu	1.7
88-01363	FKD 20-400-P7	20.0	31.0	1.780	3 x 132.6	h	10		19.0	Cu	2.6
88-01768	FDR 25-400-P7	25.0	36.1	1.530	3 x 154.2	h	10		21.0	Cu	3.9
88-01484	FKD 30-400-P7	30.0	46.5	1.190	3 x 198.9	m	10		19.0	Al	3.5
88-01923	FDR 33,3-400-P7	33.3	48.2	1.150	3 x 205.8	m	16		19.0	Al	3.5
88-02053	FDR 37,5-400-P7	37.5	54.5	1.020	3 x 232.8	n	16		23.0	Al	2.8
88-01782	FDR 40-400-P7	40.0	58.2	0.950	3 x 248.8	n	16		24.0	Al	2.8
88-01769	FDR 50-400-P7	50.0	72.2	0.770	3 x 308.4	n	16		27.0	Al	5.1
Standard Harmonic Filter Reactor - FDR/FKD - V_N = 415 V / 50 Hz - p = 7 % - fres = 189 Hz											
88-02034	FDR 6,25-415-P7	6.3	8.7	6.580	3 x 35.9	c	4		5.1	Cu	1.5
88-01937	FDR 12,5-415-P7	12.5	17.3	3.310	3 x 71.4	g	4		10.0	Cu	1.8
88-01938	FDR 25-415-P7	25.0	34.7	1.660	3 x 142.8	h	10		15.0	Cu	3.7
88-01930	FDR 50-415-P7	50.0	69.3	0.828	3 x 285.6	n	16		27.0	Al	5.3
Standard Harmonic Filter Reactor - FDR/FKD - V_N = 440 V / 50 Hz - p = 7 % - fres = 189 Hz											
88-02160	FDR 6,25-440-P7	6.3	8.3	7.360	3 x 32.1	g	4		6.0	Cu	1.5
88-02161	FDR 12,5-440-P7	12.5	16.5	3.680	3 x 64.2	g	4		9.5	Cu	2.6
88-01008	FKD 25-440-P7	25.0	34.2	1.780	3 x 132.8	k	10		21.0	Cu	3.8
88-01124	FKD 50-440-P7	50.0	68.4	0.890	3 x 265.6	n	16 / 2x6		25.0	Al	4.7
Standard Harmonic Filter Reactor - FDR/FKD - V_N = 525 V / 50 Hz - p = 7 % - fres = 189 Hz											
88-01801	FDR 6,25-525-P7	6.3	7.0	10.320	3 x 22.9	c	4		7.0	Cu	1.4
88-01802	FDR 12,5-525-P7	12.5	14.1	5.160	3 x 45.8	g	4		10.0	Cu	1.8
88-01080	FKD 20-525-P7	20.0	24.7	2.940	3 x 80.5	k	6		19.0	Cu	3.3
88-01838	FDR 25-525-P7	25.0	27.5	2.640	3 x 89.5	k	6		20.0	Cu	3.9
88-01872	FDR 50-525-P7	50.0	55.0	1.320	3 x 179.0	n	16		32.0	Al	3.1

تسلاکالا
021-9102 6126 | teslakala.com

Article-No.	Type	Q [kvar]	I_N [A]	L [mH]	C [µF]	Size	Connection Cable [mm²]	Connection Terminal [mm²]	Weight approx. [kg]	Winding material	Al/Cu Weight [kg]
Standard Harmonic Filter Reactor - FDR/FKD - V_N = 690 V / 50 Hz - p = 7 % - fres = 189 Hz											
88-01825	FKD 10-690-P7	10.0	8.9	10.700	3 x 22.1	g	4		10.0	Cu	on request
88-01932	FDR 25-690-P7	25.0	20.8	4.590	3 x 51.5	h	4		19.0	Cu	3.7
88-01933	FDR 50-690-P7	50.0	41.6	2.290	3 x 103.1	n	10		26.0	Al	4.5

Version: P7 (Detuning factor p = 7 %), 50 Hz

Permissible harmonics EN 61000-2-4 Class 3

Article-No.	Type	Q [kvar]	I_N [A]	L [mH]	C [µF]	Size	Connection Cable [mm²]	Connection Terminal [mm²]	Weight approx. [kg]	Winding material	Al/Cu Weight [kg]
Standard Harmonic Filter Reactor - FDR/FKD - V_N = 400 V / 50 Hz - p = 7 % - fres = 189 Hz											
88-01776	FDR 12,5-400-P7-S3	12.5	18.0	3.070	3 x 77.1	g	4		13	Cu	3.1
88-01777	FDR 25-400-P7-S3	25	36.1	1.530	3 x 154.2	k	10		23	Cu	7.0
88-01778	FDR 50-400-P7-S3	50	72.2	0.766	3 x 308.4	o	25		35	Al	4.5
Standard Harmonic Filter Reactor - FDR/FKD - V_N = 690 V / 50 Hz - p = 7 % - fres = 189 Hz											
88-01878	FDR 25-690-P7-S3	25	20.9	4.560	3 x 51.8	k	4		22	Cu	6.7
88-01879	FDR 50-690-P7-S3	50	41.8	2.280	3 x 103.6	o	10		22	Al	4.6

Version: P7 (Detuning factor p = 7 %), 60 Hz

Permissible harmonics EN 61000-2-4 Class 2

Article-No.	Type	Q [kvar]	I_N [A]	L [mH]	C [µF]	Size	Connection Cable lug [mm²]	Connection Terminal [mm²]	Weight approx. [kg]	Winding material	Al/Cu Weight [kg]
Standard Harmonic Filter Reactor - FDR/FKD - V_N = 230 V / 60 Hz - p = 7 % - fres = 227 Hz											
88-01996	FDR 2,5-230-P7-60	2.5	6.2	4.260	3 x 38.5	c	4		4.0	Cu	on request
88-01997	FDR 5-230-P7-60	5.0	12.5	2.120	3 x 77.3	c	6		6.0	Cu	on request
88-01998	FDR 10-230-P7-60	10.0	25.0	1.060	3 x 154.6	g	6		9.0	Cu	on request
88-02140	FDR 12,5-230-P7-60	12.5	31.4	0.843	3 x 194.3	g	10		10.0	Cu	1.8
88-02001	FDR 20-230-P7-60	20.0	49.9	0.530	3 x 309.2	h	16		15.0	Cu	on request
88-01892	FDR 25-230-P7-60	25.0	62.2	0.430	3 x 385.5	h	16		21.0	Cu	2.3
Standard Harmonic Filter Reactor - FDR/FKD - V_N = 380 V / 60 Hz - p = 7 % - fres = 227 Hz											
88-02179	FDR 12,5-380-P7-60	12.5	19.0	2.290	3 x 71.4	g	4		10.0	Cu	1.7
88-02180	FDR 25-380-P7-60	25.0	38.1	1.150	3 x 142.8	h	10		16.0	Cu	4.1
88-02181	FDR 50-380-P7-60	50.0	76.2	0.574	3 x 285.6	n	25		25.0	Al	3.9
Standard Harmonic Filter Reactor - FDR/FKD - V_N = 400 V / 60 Hz - p = 7 % - fres = 227 Hz											
88-01963	FDR 12,5-400-P7-60	12.5	18.0	2.560	3 x 64.2	g	4		10.0	Cu	2.1
88-01964	FDR 25-400-P7-60	25.0	36.0	1.280	3 x 128.1	h	10		13.0	Cu	3.0
88-01965	FDR 50-400-P7-60	50.0	72.1	0.640	3 x 256.9	n	16		24.0	Al	4.5
Standard Harmonic Filter Reactor - FDR/FKD - V_N = 440 V / 60 Hz - p = 7 % - fres = 227 Hz											
88-01914	FKD 6,25-440-P7-60	6.3	9.2	5.480	3 x 29.9	c	4		6.0	Cu	1.8
88-01795	FDR 7,5-440-P7-60	7.5	9.9	5.120	3 x 32.0	c	4		6.0	Cu	1.9
88-01883	FDR 12,5-440-P7-60	12.5	16.9	2.990	3 x 54.8	g	4		21.0	Cu	2.7
88-01796	FDR 15-440-P7-60	15.0	19.8	2.560	3 x 64.0	g	6		10.0	Cu	2.5
88-01884	FDR 25-440-P7-60	25.0	33.1	1.530	3 x 107.2	h	10		11.0	Cu	3.8
88-01875	FDR 50-440-P7-60	50.0	66.2	0.760	3 x 214.2	n	16		29.0	Al	on request

Subject to technical changes / © FRAKO GmbH / www.frako.com

تسلاکالا
021-9102 6126 | teslakala.com

Version: P7 (Detuning factor p = 7 %), 60 Hz

Permissible harmonics EN 61000-2-4 Class 2

Article-No.	Type	Q [kvar]	I_N [A]	L [mH]	C [µF]	Size	Connection Cable lug [mm²]	Connection Terminal [mm²]	Weight approx. [kg]	Winding material	Al/Cu Weight [kg]
Standard Harmonic Filter Reactor - FDR/FKD - V_N = 460 V / 60 Hz - p = 7 % - fres = 227 Hz											
88-02123	FKD 2,5-460-P7-60	2.5	3.6	14.760	3 x 11.1	c	4		3.0	Cu	on request
88-02124	FKD 5-460-P7-60	5.0	6.7	7.910	3 x 20.7	c	4		4.5	Cu	on request
88-02125	FDR 10-460-P7-60	10.0	12.4	4.250	3 x 38.5	c	4		5.0	Cu	on request
88-01854	FDR 12,5-460-P7-60	12.5	15.5	3.410	3 x 48.1	g	6		10.0	Cu	1.2
88-01855	FDR 25-460-P7-60	25.0	31.1	1.700	3 x 96.2	h	10		21.0	Cu	3.7
88-01856	FDR 50-460-P7-60	50.0	62.1	0.850	3 x 192.4	n	16		27.0	Al	4.5
Standard Harmonic Filter Reactor - FDR/FKD - V_N = 480 V / 60 Hz - p = 7 % - fres = 227 Hz											
88-01962	FDR 12,5-480-P7-60	12.5	15.4	3.590	3 x 45.6	g	4		9.0	Cu	1.9
88-02056	FDR 25-480-P7-60	25.0	30.2	1.830	3 x 89.7	h	6		15.0	Cu	3.1
88-01858	FDR 50-480-P7-60	50.0	60.5	0.910	3 x 179.4	n	16		25.0	Al	3.7

Version: P8 (Detuning factor p = 8 %)

Permissible harmonics EN 61000-2-4 Class 2

Article-No.	Type	Q [kvar]	I_N [A]	L [mH]	C [µF]	Size	Connection Cable lug [mm²]	Connection Terminal [mm²]	Weight approx. [kg]	Winding material	Al/Cu Weight [kg]
Standard Harmonic Filter Reactor - FDR/FKD - V_N = 400 V / 50 Hz - p = 8 % - fres = 177 Hz											
88-01678	FKD 2,5-400-P8	2.5	3.9	16.200	3 x 16.6	c	4		5.0	Cu	0.8
88-01941	FKD 3,13-400-P8	3.1	4.7	13.540	3 x 19.9	c	4		7.0	Cu	0.8
88-01518	FKD 5-400-P8	5.0	7.9	8.150	3 x 33.2	c	4		7.0	Cu	0.5
88-01492	FKD 6,25-400-P8	6.3	9.8	6.520	3 x 41.5	c	4		7.0	Cu	1.4
88-01519	FKD 7,5-400-P8	7.5	11.8	4.750	3 x 49.7	c	4		7.0	Cu	1.5
88-01520	FKD 10-400-P8	10.0	15.7	4.080	3 x 66.3	g	4		10.0	Cu	1.4
88-01770	FDR 12,5-400-P8	12.5	18.2	3.500	3 x 77.1	g	4		10.0	Cu	2.0
88-01381	FKD 15-400-P8	15.0	23.5	2.720	3 x 99.5	h	6		15.0	Cu	1.8
88-01926	FDR 16,7-400-P8	16.7	24.3	2.620	3 x 102.9	h	6		13.0	Cu	on request
88-01382	FKD 20-400-P8	20.0	31.4	2.040	3 x 132.6	h	10		19.0	Cu	4.0
88-01771	FDR 25-400-P8	25.0	36.5	1.750	3 x 154.2	h	10		19.0	Cu	3.7
88-01387	FKD 30-400-P8	30.0	47.0	1.350	3 x 198.9	m	10		19.0	Al	3.8
88-01927	FDR 33,3-400-P8	33.3	48.7	1.310	3 x 205.9	m	16		19.0	Al	3.8
88-02054	FDR 37,5-400-P8	37.5	54.9	1.160	3 x 231.9	n	16		24.0	Al	2.7
88-01781	FDR 40-400-P8	40.0	58.3	1.090	3 x 246.6	n	16		24.0	Al	3.0
88-01772	FDR 50-400-P8	50.0	72.9	0.874	3 x 308.4	n	16		26.0	Al	4.7
Standard Harmonic Filter Reactor - FDR/FKD - V_N = 480 V / 50 Hz - p = 8 % - fres = 177 Hz											
88-01985	FDR 25-480-P8	25.0	30.5	2.510	3 x 107.4	h	10		16.0	on request	on request
88-01986	FDR 50-480-P8	50.0	61.0	1.250	3 x 214.8	n	16		24.0	Al	3.1
Standard Harmonic Filter Reactor - FDR/FKD - V_N = 525 V / 50 Hz - p = 8 % - fres = 177 Hz											
88-01845	FKD 20-525-P8	20.0	25.0	3.350	3 x 80.5	k	6		18.0	Cu	3.5
88-01840	FDR 25-525-P8	25.0	27.8	3.010	3 x 89.5	k	6		18.0	Cu	3.7
88-01846	FDR 30-525-P8	30.0	35.0	2.390	3 x 112.7	k	10		21.0	Cu	on request
88-01871	FDR 50-525-P8	50.0	55.6	1.510	3 x 179.0	o	16		32.0	Al	3.3

تسلاکالا
021-9102 6126 | teslakala.com

Version: P8 (Detuning factor p = 8 %)

Permissible harmonics EN 61000-2-4 Class 2

Article-No.	Type	Q [kvar]	I_N [A]	L [mH]	C [µF]	Size	Connection Cable lug [mm²]	Connection Terminal [mm²]	Weight approx. [kg]	Winding material	Al/Cu Weight [kg]
Standard Harmonic Filter Reactor - FDR/FKD - V_N = 690 V / 50 Hz - p = 8 % - fres = 177 Hz											
88-01807	FKD 25-690-P8	25.0	22.6	4.870	3 x 55.3	k	4		18.0	Cu	3.7
88-01912	FDR 50-690-P8	50.0	42.1	2.610	3 x 103.1	n	10		27.0	Al	4.8

Version: P1 (Detuning factor p = 14 %), 50 Hz

Permissible harmonics EN 61000-2-4 Class 2

Article-No.	Type	Q [kvar]	I_N [A]	L [mH]	C [µF]	Size	Connection Cable [mm²]	Connection Terminal [mm²]	Weight approx. [kg]	Winding material	Al/Cu Weight [kg]
Standard Harmonic Filter Reactor - FDR/FKD - V_N = 230 V / 50 Hz - p = 14 % - fres = 134 Hz											
88-02020	FDR 15-230-P1	15.0	37.7	1.750	3 x 260.3	k	10		17.0	Cu	2.6
88-01868	FDR 30-230-P1	30.0	75.6	0.880	3 x 519.9	n	16		34.0	Al	4.3
Standard Harmonic Filter Reactor - FDR/FKD - V_N = 400 V / 50 Hz - p = 14 % - fres = 134 Hz											
88-01834	FDR 3,13-400-P1	3.1	4.2	28.300	3 x 16.6	c	4		5.0	Cu	0.9
88-02186	FDR 6,25-400-P1	6.3	9.1	13.100	3 x 35.9	f	4		7.0	Cu	1.4
88-01979	FDR 7,5-400-P1	7.5	11.0	10.800	3 x 43.4	g	4		10.0	Cu	2.1
88-01695	FDR 10-400-P1	10.0	15.1	7.860	3 x 59.8	g	4		11.0	Cu	3.2
88-01168	FDR 12,5-400-P1	12.5	18.1	6.590	3 x 71.4	h	4		13.0	Cu	2.5
88-02187	FDR 15-400-P1	15.0	22.7	5.250	3 x 89.6	h	4		15.0	Cu	4.0
88-02177	FDR 16,7-400-P1	16.7	24.2	4.910	3 x 95.8	h	4		15.0	Cu	4.0
88-01038	FDR 20-400-P1	20.0	28.6	4.160	3 x 113.1	k	6		21.0	Cu	5.7
88-01171	FDR 25-400-P1	25.0	36.1	3.290	3 x 142.8	n	10		25.0	Al	4.5
88-01039	FDR 30-400-P1	30.0	44.1	2.700	3 x 174.3	n	10		26.0	Al	4.3
88-01925	FDR 33,3-400-P1	33.3	48.2	2.470	3 x 190.7	n	16		25.0	Al	4.5
88-02176	FDR 37,5-400-P1	37.5	54.2	2.200	3 x 214.2	o	16		32.0	Al	5.3
88-02175	FDR 40-400-P1	40.0	58.8	2.020	3 x 232.4	o	16		32.0	Al	5.3
88-02174	FDR 50-400-P1	50.0	71.9	1.600	3 x 285.6	o	16		33.0	Al	5.5
Standard Harmonic Filter Reactor - FDR/FKD - V_N = 415 V / 50 Hz - p = 14 % - fres = 134 Hz											
88-01956	FDR 25-415-P1	25.0	34.6	3.440	3 x 132.6	m	10		24.0	Cu	8.9
88-01957	FDR 50-415-P1	50.0	69.6	1.770	3 x 265.2	o	16		35.0	Al	4.8
Standard Harmonic Filter Reactor - FDR/FKD - V_N = 440 V / 50 Hz - p = 14% - fres = 134 Hz											
88-02041	FDR 25-440-P1	25.0	32.8	3.980	3 x 118.0	n	10		25.0	Al	3.4
88-02007	FDR 50-440-P1	50.0	66.9	1.960	3 x 240.5	p	16		41.0	Al	5.2
Standard Harmonic Filter Reactor - FDR/FKD - V_N = 480 V / 50 Hz - p = 14 % - fres = 134 Hz											
88-02143	FDR 25-480-P1	25.0	30.4	4.690	3 x 100.2	n	6		25.0	Al	4,5
88-02144	FDR 50-480-P1	50.0	60.5	2.360	3 x 199.3	p	16		40.0	Al	7,4
Standard Harmonic Filter Reactor - FDR/FKD - V_N = 525 V / 50 Hz - p = 14 % - fres = 134 Hz											
88-02039	FDR 12,5-525-P1	12.5	15.1	10.400	3 x 45.4	h	4		14.0	Cu	3.7
88-01960	FDR 25-525-P1	25.0	27.9	5.570	3 x 84.4	m	6		22.0	Cu	5.9
88-01900	FDR 50-525-P1	50.0	55.8	2.790	3 x 168.8	o	16		33.0	Al	3.9

Subject to technical changes / © FRAKO GmbH / www.frako.com

تسلاکالا
021-9102 6126 | teslakala.com

Version: P1 (Detuning factor p = 14 %), 50 Hz

Permissible harmonics EN 61000-2-4 Class 2

Article-No.	Type	Q [kvar]	I_N [A]	L [mH]	C [µF]	Size	Connection Cable [mm²]	Connection Terminal [mm²]	Weight approx. [kg]	Winding material	Al/Cu Weight [kg]
Standard Harmonic Filter Reactor - FDR/FKD - V_N = 690 V / 50 Hz - p = 14 % - fres = 134 Hz											
88-02122	FDR 12,5-690-P1	12.5	9.6	21.300	3 x 22.1	h	4		19.0	Cu	on request
88-02120	FDR 20-690-P1	20.0	16.9	12.200	3 x 38.7	k	4		18.0	Cu	on request
88-01842	FDR 25-690-P1	25.0	21.7	9.130	3 x 50.0	n	4		27.0	Cu	5.1
88-02257	FDR 50-690-P1	50.0	43.4	4.570	3 x 99.9	p	10 / 2x4		33.0	Al	10.5

Version: P5 (Detuning factor p = 5.67 %)

$I5_{max}$ = 68 %, $I7_{max}$ = 19 %

Article-No.	Type	Q [kvar]	I_N [A]	L [mH]	C [µF]	Size	Connection Cable [mm²]	Connection Terminal [mm²]	Weight approx. [kg]	Winding material	Al/Cu Weight [kg]
Standard Harmonic Filter Reactor - FDR/FKD - V_N = 400 V / 50 Hz - p = 5,67 % - fres = 210 Hz											
88-02141	FDR 25-400-P5	25.0	35.8	1.230	3 x 155.2	n	10		23.0	Al	2.8
88-02142	FDR 50-400-P5	50.0	71.6	0.617	3 x 310.4	o	25		33.0	Al	7.2

Version: P5 (Detuning factor p = 5.67 %). 50 Hz

Permissible harmonics EN 61000-2-4 Class 3

Article-No.	Type	Q [kvar]	I_N [A]	L [mH]	C [µF]	Size	Connection Cable [mm²]	Connection Terminal [mm²]	Weight approx. [kg]	Winding material	Al/Cu Weight [kg]
Standard Harmonic Filter Reactor - FDR/FKD - V_N = 400 V / 50 Hz - p = 5.67 % - fres = 210 Hz											
88-01833	FDR 25-400-P5-S3	25	35.7	1.240	3x154.6	n	10		25	Al	3.1
88-02022	FDR 50-400-P5-S3	50	71.2	0.621	3x308.4	p	35		48	Cu	14.0
Standard Harmonic Filter Reactor - FDR/FKD - V_N = 690 V / 50 Hz - p = 5.67 % - fres = 210 Hz											
88-02063	FDR 25-690-P5-S3	25	20.5	3.720	3x51.4	n	6		26	Al	3.7
88-02064	FDR 50-690-P5-S3	50	41	1.860	3x103.1	p	16		43	Al	6.9

تسلاکالا
021-9102 6126 | teslakala.com

Dimensions

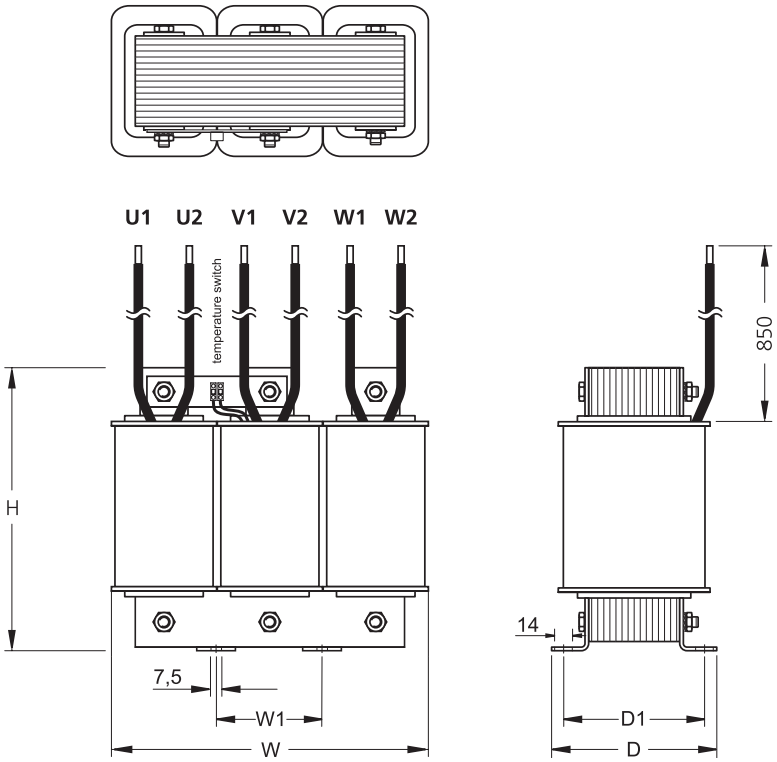

Core 3UI	Dimensions [mm]				
	W_{max}	W1	D_{max}	D1	$H_{\pm 3.0}$
a	120	40	83	63	110
c	150	50	97	77	132
e	180	60	91	71	156
f	180	60	101	81	156
g	180	60	111	91	156
h	204	68	121	101	177
k	228	76	128	108	197
m	264	88	114	94	229
n	264	88	140	120	230
o	300	100	150	129	265
p	300	100	165	144	265

Subject to technical changes / © FRAKO GmbH / www.frako.com

تسلاکالا
021-9102 6126 | teslakala.com



The Power Quality Controller – fit for the future

PQC
Power Quality Controller

The new universal control characteristic curve makes the FRAKO PQC even more flexible in use. It can be relied upon to optimize the power factor not only in classical correction systems but also in state-of-the-art decentralized power generation networks. In addition, the universal control curve ensures extremely efficient operation of the power factor correction system with minimized component wear. Continuous monitoring of system variables and control parameters means that critical situations are detected in good time. By means of selective switching, the PQC protects the installation against overloading, thus guaranteeing safe and reliable operation of the correction system.

The PQC Power Quality Controller adds powerful new functionality to the well-known strengths of the FRAKO Reactive Power Control Relays to meet the challenges posed by state-of-the-art power quality systems. With its built-in microprocessor, the PQC handles tasks over and above classical power factor correction. In particular, new protective mechanisms have been incorporated to safeguard not only the network itself but also the system that corrects its power factor. The PQC thus monitors the relevant parameters that can cause disruptions in the network, and gives alarms if they go beyond the limits set to ensure compliance with technical standards. In addition, the PQC also protects the power factor correction system responsible for the network, shutting it down if it becomes overloaded. This significantly reduces the risk of upsets occurring within that system. Defective or partially defective capacitor stages are identified and withdrawn from the power factor correction process. An extremely flexible alarm management function ensures that alarm messages are sent to where they are needed, as appropriate to the event concerned. The possibility of parameterizing each individual controller enables the PQC to be used anywhere, making it the best possible instrument for controlling power quality in contemporary industrial supply networks. The PQC is characterized by user-friendly features such as simple installation, intuitive operation and the automatic start-up already known from FRAKO Reactive Power Control Relays. Its integrated self-monitoring function improves long-term operational reliability, thus helping to reduce costs and minimize the risk of network disruptions.

Key features

- 1- or 3-phase measurement
- 4-quadrant control
- 6 or 12 switching outputs + 1 alarm contact
- 5 parameterizable control curves
- Graphical user interface with plain text menu in choice of languages
- Integrated monitoring of system parameters with alarm management function
- Now also available with inductive and mixed inductive/capacitive control

Recommended applications

The PQC is suitable for 4-quadrant power factor correction in:

- Consumer networks
- Power generation networks
- Low and medium voltage networks
- Power factor correction systems with or without detuning

تسلاکالا
021-9102 6126 | teslakala.com

Instrument versions

The PQC is designed primarily for mounting in a 138 x 138 mm cutout in the front of a control panel. Different versions of the instrument can be selected to suit the required application. These differ essentially according to:

- Instrument power supply
- Number of measurement inputs
- Number and rating of switching outputs

Combinations of these parameters mean that 6 different basic types are available:

Instruments with 100–240 V, 50/60 Hz power supplies

Type	Measurement inputs	Switching outputs
PQC 1202401-0	1 V/I	12 x 250 V / 3 A
PQC 1202403-0	3 V/I	12 x 250 V / 3 A
PQC 0602401-0	1 V/I	6 x 250 V / 3 A

Instruments with 100–480 V, 50/60 Hz power supplies

Type	Measurement inputs	Switching outputs
PQC 1204801-0	1 V/I	12 x 250 V / 3 A
PQC 1204803-0	3 V/I	12 x 250 V / 3 A
PQC 0614801-0	1 V/I	6 x 440 V / 3 A

The inputs for the measured voltage are designed for 100-690 V networks, 50/60 Hz; those for the measured current are designed for use with x/1A or x/5A current transformers.

Operating the PQC

The PQC has a backlit monochrome LC display with 128 × 64 pixels, plus 5 keys for navigating the plain language (German, English, French, Spanish, Chinese) menu.

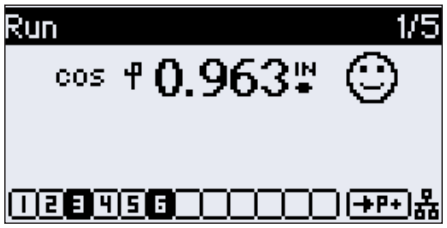

Overview screen



Stage Editor

The menu is structured in an intuitive way that makes it easy to parameterize the instrument. An overview of the controller in the display shows the key information for the individual phases together with the status of the switching outputs. The operator is thus given all relevant information on the state of the power factor correction system at a glance. An intelligent alarm management function alerts the operator to critical conditions, either by messages in the display, via the alarm contact, or both, as desired.

Consistently better

The new control characteristic curve with its increased control range has been shown to significantly reduce the number of switching cycles compared to earlier curves. This new universal curve gives the system flexibility in responding to the reactive power demands in both consumer and generator installations. Configuration of the upper and lower cos φ values enables the control characteristic to adapt to exactly comply with utility company specifications. Different control curves can be set for power draw and power feed-in conditions.

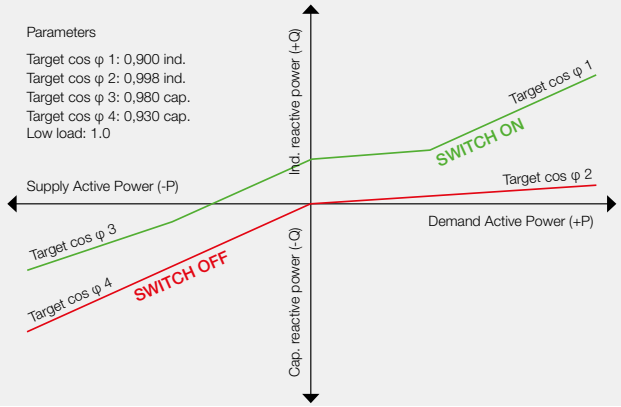

Precise, flexible and universal – Frako PQC

Profile switching for even more flexibility

The new universal characteristic curve boosts the versatility of the instrument, enabling it to meet additional challenges, particularly those posed by power factor correction in plants that generate electricity. An automatic switchover function – between up to 5 control profiles – is already integrated in the FRAKO PQC. Switching is prompted either by the active power or the measured voltage. If a Temp. I/O module is fitted, the profiles can also be switched by the digital input signals.

Commissioning the PQC

When first started up, the PQC automatically determines the system configuration to which it is connected plus the switching outputs in use with their respective capacitance ratings (in kvar). The operator selects the appropriate control profile for the application or parameterizes the PQC to meet the required specifications. Five control profiles—specially developed for the most frequently encountered applications—are saved in the instrument before it leaves the factory. On completion of the start-up procedure, the PQC switches the connected capacitor stages in or out according to the selected control curve.

Subject to technical changes / © FRAKO GmbH / www.frako.com

تسلاکالا
021-9102 6126 | teslakala.com

Ready for the digital transformation

With the FRAKO PQC, you are prepared for the Internet of Things (IoT). Through the Ethernet interface, the PQC provides all measurement values and information from the compensation system. Standardized fieldbuses such as Modbus TCP and REST interface enable easy retrieval of information. But even in stand-alone operation, all measurement values and information can be accessed through the integrated web server. The visually integrated control diagram shows the user how the PQC has been configured and where the current operating point is located.

Features / Technical Data

Category	1-phase 12 stages	3-phase 12 stages	1-phase 6 stages	1-phase 12 stages	3-phase 12 stages	1-phase 6 stages
Type	PQC 1202401-0	PQC 1202403-0	PQC 0602401-0	PQC 1204801-0	PQC 1204803-0	PQC 0614801-0
Plain language selection	DE/EN/FR/ES/CN/IT					
Extended function option	• (**)					
Article No.	38-00400	38-00401	38-00402	38-00406	38-00407	38-00410
Voltage measurement	L-N / L-L					
Measured voltage [V]	100 - 690			100 - 690 ****		
Operating voltage [V]	100 - 240			100 - 480		
Network frequency [Hz]	50 / 60					
Currents measured	1	3	1	1	3	1
Min. response current [mA], manual programming	20					
Current transformer x/…A	1 - 5					
Connection type	Man/Auto	Man	Man/Auto	Man/Auto	Man	Man/Auto
Target cos φ (ind./cap.)	0.5 (ind.) - 0.5 (cap.)					
Resolution (target cos φ)	0.01					
Control characteristic curve setting	Variable					
Number of control curves	5					
Control selectable from Lx/Ly/Lz	• / - / -	• / • / •	• / - / -	• / - / -	• / • / •	• / - / -
Switching sequence	Man/Auto					
Determining number of active switching outputs	Man/Auto					
Number of fixed stages programmable	freely selectable (6/12)					
Relay switching contacts	12	12	6	12	12	6
Relay switching contact load rating	250 V / 750 VA					440 V / 1320 VA UL/CSA 3 A - 250 VAC / 30 VDC
Relay contact switching delay	Adjustable 5 - 500 s					
Effective relay contact switching delay	Optimized to match load changes					
Relay contact switched-off time (discharge time)	Adjustable 5 - 900 s					

تسلاکالا
021-9102 6126 | teslakala.com

Category	1-phase 12 stages	3-phase 12 stages	1-phase 6 stages	1-phase 12 stages	3-phase 12 stages	1-phase 6 stages
Type	PQC 1202401-0	PQC 1202403-0	PQC 0602401-0	PQC 1204801-0	PQC 1204803-0	PQC 0614801-0
Alarm function	Display / message / 1 volt-free NO contact					
Alarm switching contact load rating	250 V / 3 A					
Self-diagnosis	•					

Category	1-phase 12 stages	3-phase 12 stages	1-phase 6 stages	1-phase 12 stages	3-phase 12 stages	1-phase 6 stages
Type	PQC 1202401-0	PQC 1202403-0	PQC 0602401-0	PQC 1204801-0	PQC 1204803-0	PQC 0614801-0
Dimensions W x H x D [mm]	144 x 144 x 70					
Panel cutout dimensions [mm]	138 x 138					
Ingress protection, front	IP50 (IP54***)					
Ingress protection, rear	IP20					
Net weight [kg]	0.77					
Ambient Temperature	-25 °C to + 65 °C, No Condensation					
Maximum Installation Heigh	Maximum geographical installation height 2,000 m above sea level					
Display	Monochrome backlit display, 128 × 64 pixels					
Start-up Wizard	(stage editor)					
Measurement (frequency [kHz] / continuous)	12.5 / •					
Momentary cos φ	•					
Target cos φ	•					
Apparent current	•					
Capacitor current (overcurrent)	•					
Active [kW] / Reactive [kvar] / Apparent [kVA] power	• / • / •					
Corrective power still lacking (kvar)	•					
Capacitor power per stage	•					
Number of capacitor stages switched in	•					
Network voltage L-L [V]	•					
Harmonic voltage [%]	1st–19th 1 x manual spectrum analysis 0...2.5 kHz (v, vi)					
Harmonic current [%]	1st–19th 1 x manual spectrum analysis 0...2.5 kHz (v, vi)					
Switching cycles per stage	•					
Corrective power lacking (cos φ alarm)	Alarm (can be disabled)					
Defective capacitor stages	•					
Maximum number of switching cycles	Alarm					
Undervoltage	Alarm Shutdown					

Subject to technical changes / © FRAKO GmbH / www.frako.com

تسلاکالا
021-9102 6126 | teslakala.com

Category	1-phase 12 stages	3-phase 12 stages	1-phase 6 stages	1-phase 12 stages	3-phase 12 stages	1-phase 6 stages
Type	PQC 1202401-0	PQC 1202403-0	PQC 0602401-0	PQC 1204801-0	PQC 1204803-0	PQC 0614801-0
Overcurrent	Alarm Shutdown (can be disabled)					
Undercurrent	Message Shutdown					
Harmonic voltage limits	Alarm Shutdown					
Thermal trip	• **					
Power failure detection	adjustable from 1/2 cycle to full cycle; de-energizes all active capacitor stages, automatically restarts when power resumes					
Stage monitoring	Monitoring of kvar loss per stage, adjustable 0...95 %					
Diagrammatic spectrum visualization	•					
Diagrammatic switching cycle visualization	•					
Diagrammatic stage power visualization	•					
Firmware function update	• *					

* possible with USB cable, ** see different PQC types, *** IP54 upgrade kit, **** UL 600 V AC
[vi] Advance indication for harmonics analysis, [v] 2,5 kHz ~ 50th harmonic (50 Hz) ~ 40th harmonic (60 Hz)

Different types:

Category	1-phase 12 stages	3-phase 12 stages	1-phase 6 stages	1-phase 12 stages (UL)	3-phase 12 stages (UL)	1-phase 6 stages (UL)
Modbus RTU (RS-485) interface:						
Type	PQC 1202401-20	PQC 1202403-20	PQC 0602401-20	PQC 1204801-20	PQC 1204803-20	PQC 0614801-20
Article-No.	38-00404	38-00412	38-00417	38-00422	38-00427	38-00432
Temperature and I/O*						
Type	PQC 1202401-01	PQC 1202403-01	PQC 0602401-01	PQC 1204801-01	PQC 1204803-01	PQC 0614801-01
Article-No.	38-00403	38-00411	38-00416	38-00421	38-00426	38-00431
Modbus TCP (IoT) interface*						
Type	PQC 1202401-30	PQC 1202403-30	PQC 0602401-30			
Article-No.	38-00408	38-00414	38-00419			
Modbus RTU (RS-485) interface + temperature and I/O						
Type	PQC 1202401-21	PQC 1202403-21	PQC 0602401-21			
Article-No.	38-00405	38-00413	38-00418			
Modbus TCP (IoT) interface + temperature and I/O						
Type	PQC 1202401-31	PQC 1202403-31	PQC 0602401-31			
Article-No.	38-00409	38-00415	38-00420			

***Advanced temperature and I/O extension:**
This option consists of 3 temperature measurement inputs, which can be wired with a PT100 or PT1000 and 2 NTC's. For each of the 3 temperature sensors connected, an individual threshold value can be set. 5 digital in- and outputs (I/O) are additionally available, which are individually configurable. The digital in- and outputs need an external supply voltage of 5 … 24 V DC and can be loaded with 100 mA per output.
Application example:
- Fan control (temperature detection)
- Temperature monitoring
- Automatic switching of relay profiles 1 and 2 (only I/O 1)
- Individually configurable outputs (e.g. to a process control system (PLC)) for status indication and selected alarms

***IoT (Internet of Things):**

With this option, systems can be networked via the REST interface or the Modbus TCP/IP Ethernet protocol (RJ-45 connector). A web server with system parameters is also available.

Accessories:

Article-No.	20-50015	IP54 seal set for PQC

Dimensions

Dimensional drawing PQC

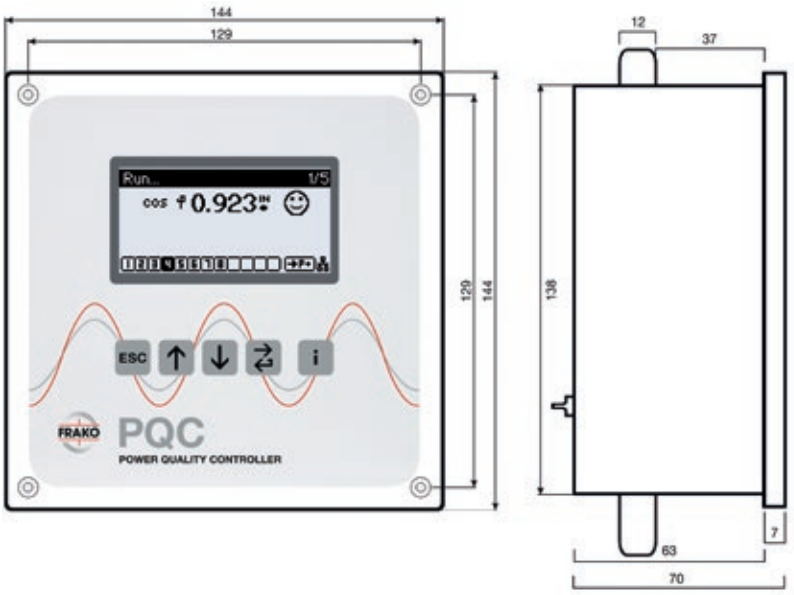

All dimensions in mm

Subject to technical changes / © FRAKO GmbH / www.frako.com

تسلاکالا
021-9102 6126 | teslakala.com



PQC PRO
Power Quality Controller Professional

The Power Quality Controller Professional combines the strengths of previous FRAKO reactive power control relays with the latest supplementary functions. A PQC Pro instrument can handle all the tasks demanded of today's ever more complex reactive power management systems, whether maintaining the steady-state voltage stability required by the electric utility, networked reactive power management, external control of master reactive power controllers or true 4-quadrant power factor correction.

The universally applicable control curve makes it possible to comply with all the requirements of a reactive power control system. Despite this high degree of freedom, the FRAKO control curve is easy to parameterize. When requested, our service team will analyse your installation and configure the curve to suit your needs.

The wide range of functions offered by the PQC Pro, when combined with the appropriate number of FRAKO cos µ correction modules, enables all manner of power factor correction duties to be performed, whether inductive or capacitive.

Renewable sources of energy cut electricity costs and reduce the CO_2 emissions caused by a company and its products. However, when these alternative technologies supply power, they must comply with special stipulations made by the electric utility. This is no problem for the PQC Pro, and what is more, a FRAKO power factor correction system does this differently to an inverter! With the latter, some of the valuable active power generated by the renewable source is wasted as reactive energy.

Companies with distributed feed-in points face the challenge of adapting their power factor management to a networked topology, such as one having several transformers and cos µ correction systems.Here as well, the PQC Pro provides optimum solutions. Up to four VAr controllers can be interconnected. One of these acts as the master instrument, controlling the others. For maximum security of operation, each of these slave controllers is programmed with a back-up control function and its own installation protection concept.

The professional in power factor control

- Reactive power control curve as a function of voltage Q(V)
- Inductive and capacitive control
- Networked correction systems
- Target power factor set externally
- Characteristic control curve, adjustable for every duty
- All key information at a glance on instrument or web interface
- Power quality data (optimized for power factor control)
- Extensive messaging on correction system and installation status
- User-friendly operation
- Fully automatic start-up of installation parameters
- Correction of faulty connections
- Forward compatibility for updates
- Communications extensions

تسلاکالا
021-9102 6126 | teslakala.com

Flexible – optimized for every duty

FRAKO modular power factor correction units, combined with the unbeatable versatility of the PQC Pro, make it possible to accomplish a wide variety of cos μ correction duties with optimum results. Whether inductive or capacitive corrective power is required, the watchword is always “Connect – ready – run”.

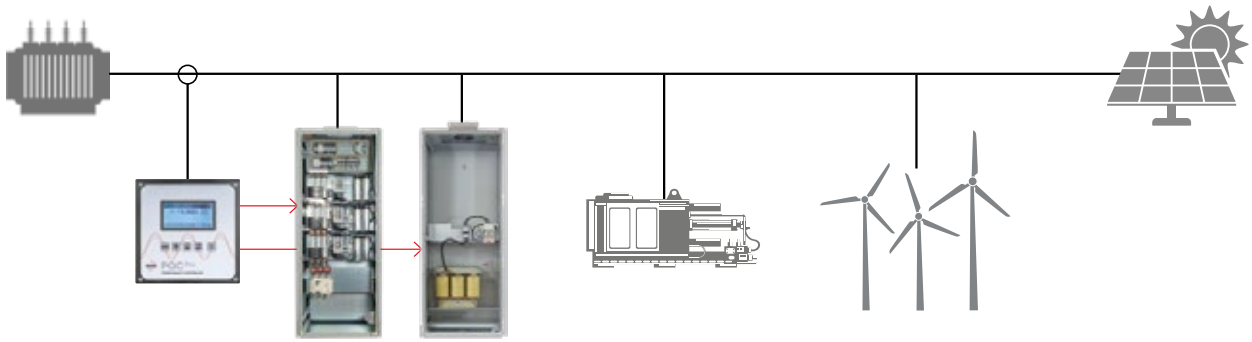

PQC Pro
Power factor correction capacitive and inductive

LSFC
Capacitive cos φ correction modules

LSI
Inductive cos φ correction modules

Electric utility – every WATT counts

Photovoltaic systems and other green energy sources have become hot topics in recent years. They cut electricity costs and reduce the carbon footprint of a company and its products. However, when these alternative technologies supply power, they must comply with the special stipulations made by electric utility companies, which prescribe measures to maintain steadystate voltage stability when large onsite generation systems are operating. Compliance with the utility companies’ regulations is no problem with the new PQC Pro. In addition, a FRAKO power factor correction system does this better than an inverter! With inverters, some of the valuable active power generated onsite is wasted as reactive energy. We help you to make sure that every watt produced from the sun, the wind and flowing water ends up where it is needed.

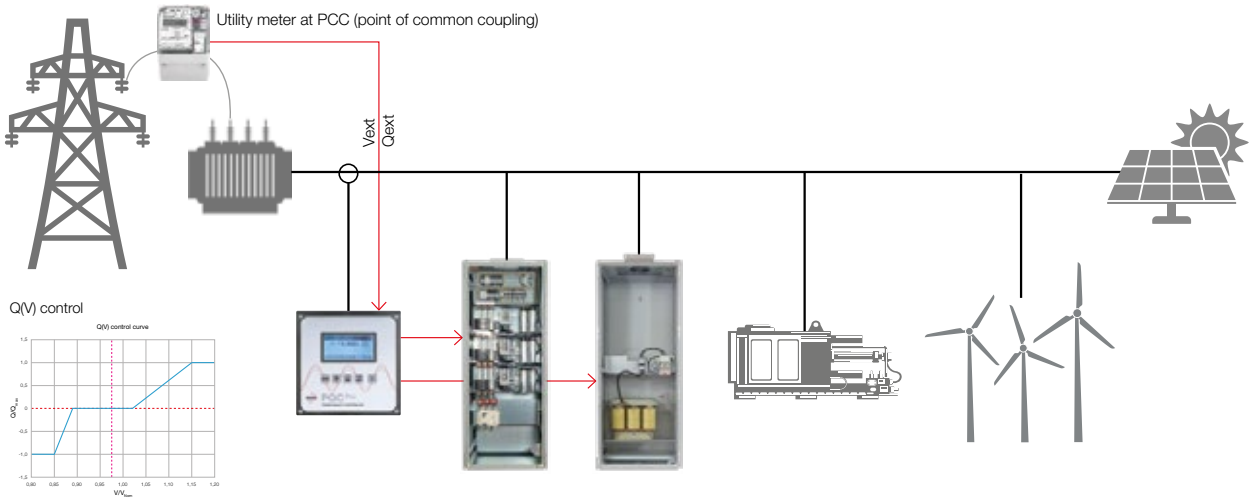

The voltage-controlled reactive power at the PCC establishes itself at a certain level. When a change of load occurs in the low voltage system, the reactive power is restored to its original level.

PQC Pro
Reactive power at the PCC is regulated according to the Q(V) control curve.

LSFC
Capacitive cos φ correction modules

LSI
Inductive cos φ correction modules

Subject to technical changes / © FRAKO GmbH / www.frako.com

تسلاکالا
021-9102 6126 | teslakala.com

Networked – optimum power factor management

Companies with distributed feed-in points face the challenge of adapting their power factor management to a networked topology. Here also, the PQC Pro provides solutions specially optimized to meet this need. Up to four VAr controllers can be interconnected. One of these acts as the master instrument, controlling the others. For maximum security of operation, each of these slave controllers is programmed with a back-up control function and its own installation protection concept.

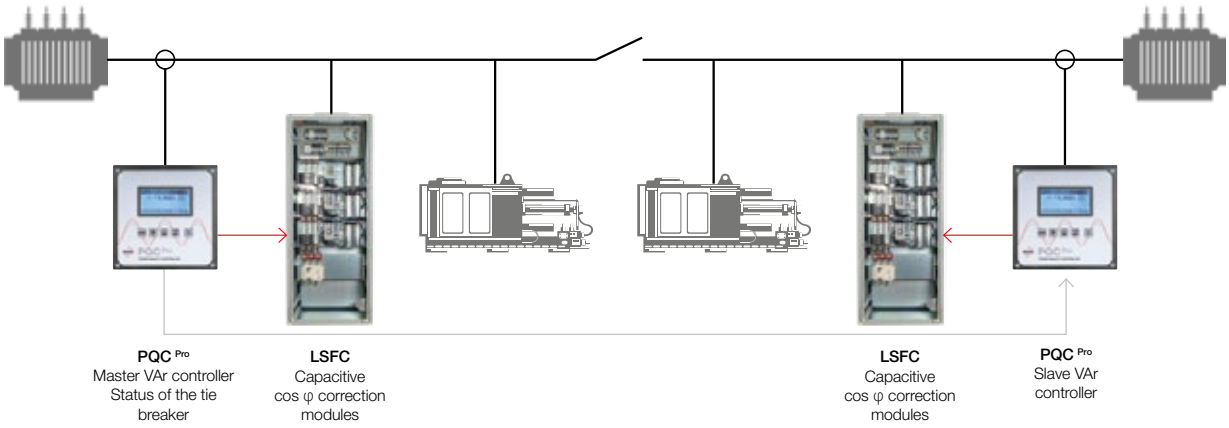

تسلاکالا
021-9102 6126 | teslakala.com

تسلاکالا
021-9102 6126 | teslakala.com



Components
Power Factor Control Relays

**The Reactive Power control Relay for maximum operational reliability.
Simple to install, easy to operate and automatic ‘plug and play’ start-up.**

Characteristics that count

FRAKO’s intelligent reactive power control relays automatically adjust themselves to suit the power factor correction system and the network that they serve. This automatically eliminates the risk of faulty programming.
Incorrect connections or inappropriate locations for the instrument transformers are identified and indicated, therefore making time-consuming and expensive troubleshooting unnecessary.
The patented characteristic curve controls the set target cos φ as a minimum value under normal load while simultaneously preventing overcorrection under low load conditions. This reliably prevents costs for reactive power arising and reduces the risk of network disruptions.
The control relay’s intelligent mode of operation ensures that the target parameters are controlled and maintained with the lowest possible number of switching cycles. This minimizes wear of the power factor correction system and reduces disturbances to the network.
Some control relay versions have a trip function to protect the power factor correction system from excessive levels of harmonics.
Last not least, our customers appreciate the user-friendly operation of our reactive power control relays.

Application Recommendations

Consumer network with regulation on inductive target cos φ Quadrant: consumption – inductive	RM 2106 / RM 2112 see from page 36 PQC see from page 39
Consumer- and electricity producer networks with regulation in all 4 quadrants	PQC see from page 39
Measurement value logging of voltage and current (medium voltage)	PQC see from page 39
Detuned Power Factor Correction Systems with detuning factors < 7 % or networks with sporadically higher harmonic voltages according to EN 61000-2-4 class 2	PQC see from page 39
Part dynamic Power and dynamic Factor Correction Systems	PFC-12TR-1, PFC-12TR-1-RS485 see from page 36

تسلاکالا
021-9102 6126 | teslakala.com

Features / Technical Data

Category	Basic	
Type	RM 2106	RM 2112
Article-No. (German, English)	38-00320	38-00340
Voltage measurement	L-N	
Operating/Measurement voltage [V]	220 - 240	
Frequency [Hz]	50 / 60	
Current measurement	Single phase	
Operating current min. [mA] man. programming	20	
Operating current min. [mA] automatic detection	20	
Current transformer X/…A	1 -5	
Connection type	Man/Auto	
Target cos φ	0.85 ind. - 1	
Characteristics settings	Fixed	
Number of characteristics	1	
Switching sequence	Man/Auto	
Number of active switching outputs	Man/Auto	
Relay contacts	6	12
Loading capacity of the relay contacts	230 V / 950 VA	
Switching time delay of the relay contacts	Fixed, 60 sec.	
Real switching time delay of the relay contacts	Optimised, depending on the load changes	
Switching time (discharge time) of the relay contacts	Fixed 60 sec.	
Fault signal contacts	1 relay switch contact selectable	
Loading capacity of the fault signal contacts	230 V / 950 VA	
Dimensions W x H x D [mm]	144 x 144 x 40	
Panel cut out [mm]	138 x 138	
Ingress protection front	IP50 (IP54*)	
Ingress protection backside	IP20	
Weight (net) [kg]	0.8	

* when using a sealing ring (optional)

Subject to technical changes / © FRAKO GmbH / www.frako.com

تسلاکالا
021-9102 6126 | teslakala.com

Category	Dynamic	
Type	**PFC-12TR-1**	**PFC-12TR-1-RS485**
Article-No.	39-29060	39-29061
Supply voltage (L-N / L-L)	110-440 V AC, ± 10%	
Consumption	max. 3 VA	
Display	128 x 64 Pixel	
Voltage measurement	L-N / L-L	
Voltage ranges	30-440 V AC L-N / 50-760 V AC L-L	
Frequency	42 - 80 Hz	
Sampling rate	10 kHz (bei 50 Hz)	
Current measurement	Single phase	
Current ranges	x / 5 A (x / 1 A)	
Response current	20 mA	
Maximum current	6 A	
Consumption of current measurement	ca. 0.2 VA	
Switching outputs (relay)	12	
Switching capacity	max. 250 V / 1.000 W	
Fusing	10 AT	
Mechanical lifetime	> 10^7 switching cycles	
Electrical lifetime	> 10^5 switching cycles	
Switchting outputs (transistor)	12	
Switching voltage	24 V	
Switching current	max. 50 mA	
Alarm relay (switching capacity)	1 (max. 250 V / 1.000 W)	
Digital input (tariff switching)	–	•
Interface (communication)	–	RS485
Supported communication protocolls	–	Modbus RTU, Modbus KTR, ASCII Out, Master Mode, Slave Mode, Slave Hybrid
Controller Networking	–	•
Dimensions (W x H x D)	144 x 144 x 55 mm	
Weight	1 000 g	
Protection degree according to IEC 60529	front IP54, back IP20	
Mounting	front plate	
Connection cross-sections	0.08-2.5 mm² (solid, stranded and fine-stranded), 1.5 mm² (pin cable lug, wire end sleeve)	
Operating ambient temperature	-20 … +60 °C	
Relative humidity	max. 95% without condensation	
Altitude	max. 2 000 m	
Degree of pollution	2	
Mounting position	any	
EMI	Guidelines 2004/108/EG & 2006/95/EG	
Device security	IEC/EN 61010-1 & IEC/EN 61010-1-08	
Protection class	I (with protective conductor)	
Interference immunity	IEC 61000-6-2; EN 61326, industrial environment	
Emitted interference	DIN EN (IEC) 61326-1, class B: living environment, DIN EN (IEC) 61326-1, class A: industrial environment	

تسلاکالا
021-9102 6126 | teslakala.com

Operating mode displays

Category	Basic	
Type	RM 2106	RM 2112
Actual cos φ	Instantaneous value	Instantaneous value
Target cos φ	•	•
Active current [A]	•	•
Reactive current [A]	•	•
Apparent current [A]	Instantaneous value	Instantaneous value
Capacitor power per step	Value	Value
Connected capacitor steps	•	•
Harmonic voltage [%]	THDv	THDv
Lack of capacity	Alarm can be deactivated	Alarm can be deactivated
Defective capacitor steps	Alarm	Alarm
Switching operations threshold value	Alarm	Alarm
Undervoltage	Alarm Switch-off	Alarm Switch-off
Overcurrent	Alarm switch-off	Alarm switch-off
Minimum current	Message switch-off	Message switch-off
Harmonic voltage limit	Alarm	Alarm

Category	Dynamic	
Type	PFC-12TR-1	PFC-12TR-1-RS485
Actual cos φ	Instantaneous and average value	Instantaneous and average value
Target cos φ	•	•
Active current [A]	•	•
Reactive current [A]	•	•
Apparent current [A]	Instantaneous and peak value	Instantaneous and peak value
Capacitor power per step	•	•
Connected capacitor steps	•	•
Harmonic voltage [%]	3., 5., 7., 9., 11., 13., 15., 17., 19.	3., 5., 7., 9., 11., 13., 15., 17., 19.
Lack of capacity	Alarm can be deactivated	Alarm can be deactivated
Defective capacitor steps	-	-
Switching operations threshold value	-	-
Undervoltage	Alarm Switch-off - can be deactivated	Alarm Switch-off - can be deactivated
Overcurrent	Alarm - can be deactivated	Alarm - can be deactivated
Minimum current	Alarm switch-off - can be deactivated	Alarm switch-off - can be deactivated
Harmonic voltage limit	Alarm - can be deactivated	Alarm - can be deactivated

Dimensions

Dimensional drawing RM 2106 (RM 2112)

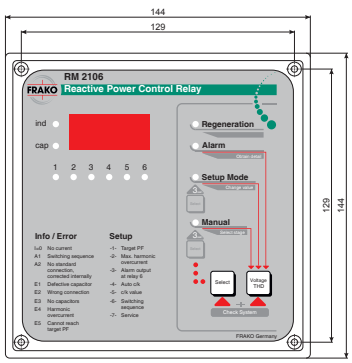

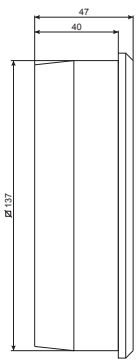

Dimensional drawing PFC-12TR-1/PFC-12TR-1-RS485

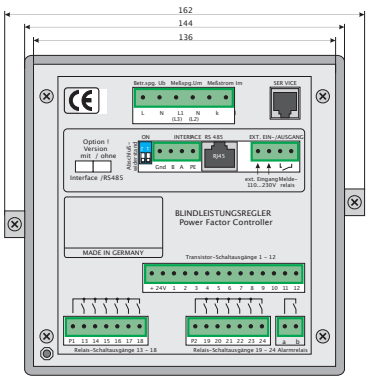

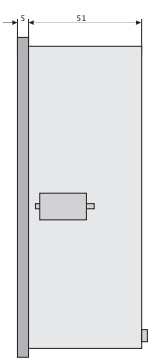

All dimensions in mm

Subject to technical changes / © FRAKO GmbH / www.frako.com

تسلاکالا
021-9102 6126 | teslakala.com

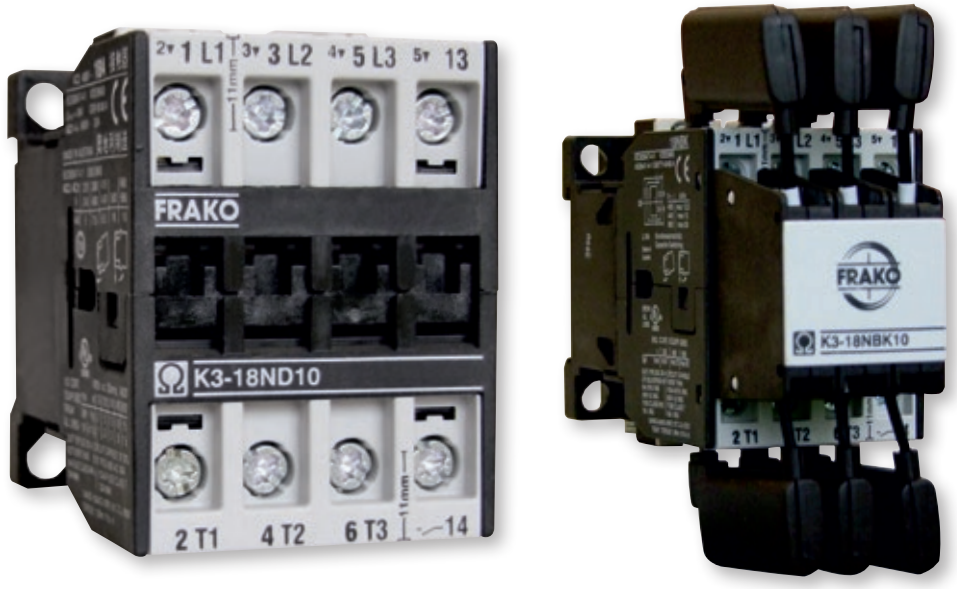

K3-...K... / K3-...A...

Capacitor Switching Contactors for Power Factor Correction Systems with or without reactors

Switching Power Capacitors safely –
Capacitor Switching Contactors for any application.

- Safe switching of capacitor stages with or without reactors
- Bounce-free switching contacts
- Wear-free contact material
- Long service life and a high number of switching operations

Application Recommendations

Depending on the application appropriate switching devices are needed for the switching of power factor correction capacitors.

During the switching of Power Capacitors a peak inrush current of 200 times of the rated current can occur. In order to limit the inrush current and to protect switching devices and capacitors, capacitor switching contactors type K3-…K with leading transition contacts are used. To limit the inrush current to <70 x I_N , damping resistors are used.

In case of detuned power factor correction systems the high inrush current is damped by the inductance of the harmonic filter reactor. In those applications capacitor switching contactors type K3-…A are used. Those contactors are made of a special contact material.

تسلاکالا
021-9102 6126 | teslakala.com

General Technical Data

Main Contacts		Type	K3-18	K3-24	K3-32	K3-50	K3-62	K3-74	K3-90	K3-115
Max. ambient temperature										
Operation	open	[°C]	-40 to +60 (+90) [1]							
	enclosed	[°C]	-40 to +40							
Storage		[°C]	-50 to +90							
Short circuit protection										
for contactors without thermal overload relay Coordination-type „1“ according to IEC 947-4-1 Contact welding without hazard of persons										
Max. fuse size	gL (gG)	[A]	100	100	100	160	160	200	200	250
Electrical endurance										
Switching cycles			80.000	80.000	80.000	80.000	80.000	80.000	80.000	80.000
short-time withstand current	10s-current	[A]	144	184	240	360	504	592	680	880
Power loss per pole	at I_e/AC3 400 V	[W]	0.5	0.7	1.3	2.2	3.9	5.5	4.3	6.0

[1] With reduced control voltage range 0.9 up to 1.0 U_s and with reduced rated current I_e/AC1 according to I_e/AC3

Mounting Instructions

In the area of capacitor switching contactors only self-extinguishing material and material of low inflammability may be used, as abnormal temperatures in the area of the resistor spirals, in case of a fault, cannot be excluded.

Typical Circuit Diagram

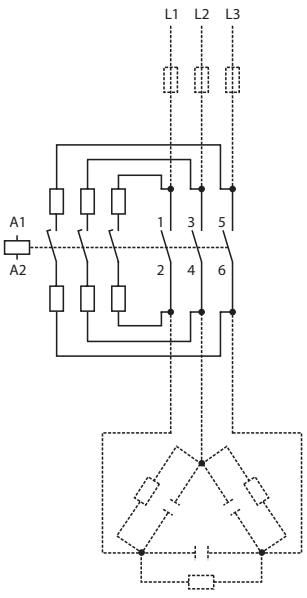

K3-...K...

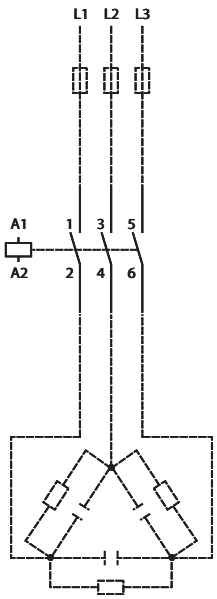

K3-...A...

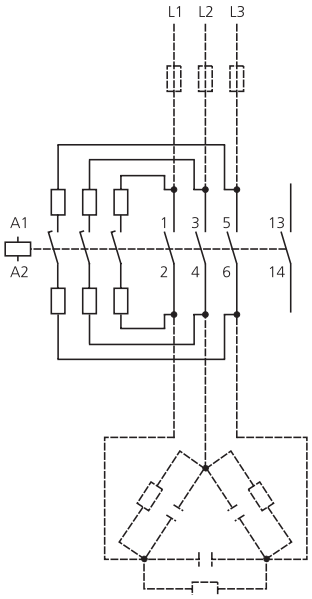

K3-18NBK

Subject to technical changes / © FRAKO GmbH / www.frako.com

تسلاکالا
021-9102 6126 | teslakala.com

Technical Data

Article-No.	Type	Rated operational power at 50 / 60 Hz						Aux. contacts			Weight approx.
		Ambient temperature						built-in			
	Coil voltage 220-240 V, 50 Hz 230-264 V, 60 Hz	50 °C			60 °C					add	
		380 V	415 V	660 V	380 V	415 V	660 V				
		400 V	440 V	690 V	400 V	440 V	690 V				
		[kvar]	[kvar]	[kvar]	[kvar]	[kvar]	[kvar]	NO	NC	Pcs.	[kg/pc.]
Type K3-…A											
89-00288	K3-18ND10 230	12.5	13	20	12.5	13	20	1	-	4 [2]	0.3
89-00289	K3-24A00 230	20	22	33	20	22	33	-	-	6 [3]	0.5
89-00290	K3-32A00 230	25	27	41	25	27	41	-	-	6 [3]	0.5
89-00291	K3-50A00 230	33.3	36	55	33.3	36	55	-	-	6 [3]	0.9
89-00292	K3-62A00 230	50	53	82	50	53	82	-	-	6 [3]	0.9
89-00293	K3-74A00 230	75 [4]	75 [4]	100 [4]	60	64	100	-	-	6 [3]	0.9
89-00358	K3-90A00 230	80	82	120	75	77	120	-	-	9 [5]	2.2
89-00359	K3-115A00 230	100 [6]	103 [6]	148 [6]	90 [6]	93 [6]	148 [6]	-	-	9 [5]	2.2
Type K3-…K											
89-00469	K3-18NBK10 230	0-12.5	0-13	0-20	0-12.5	0-13	0-20	1	-	1 [2]	0.4
89-00279	K3-24K00 230	10-20	10.5-22	17-33	10-20	10.5-22	17-33	-	-	3 [3]	0.7
89-00278	K3-32K00 230	10-25	10.5-27	17-41	10-25	10.5-27	17-41	-	-	3 [3]	0.7
89-00277	K3-50K00 230	20-33.3	23-36	36-55	20-33.3	23-36	36-55	-	-	3 [3]	1.0
89-00276	K3-62K00 230	20-50	23-53	36-82	20-50	23-53	36-82	-	-	3 [3]	1.0
89-00286	K3-74K00 230	20-75 [4]	23-75 [4]	36-120 [4]	20-60	23-64	36-100	-	-	3 [3]	1.0
89-00356	K3-90K00 230	33-80	36-82	57-120	33-75	36-77	57-120	-	-	6 [5]	2.3
89-00357	K3-115K00 230	33-100 [6]	36-103 [6]	57-148 [6]	33-90 [6]	36-93 [6]	57-148 [6]	-	-	6 [5]	2.3

[2] 1HN.. or HA.. snap-on [3] 1HN .. or HA.. snap-on + 2HB.. for side mounting
[4] Consider the max. thermal current of the contactor K3-74: I_{th} 130 A [5] 2HB.. on the left or right side and 4HN.. or HA.. snap-on
[6] Consider the min. cross-section of conductor at max. load

Specification: Contactors K3-..K are suitable for switching low-inductive and low-loss capacitors in capacitor banks (IEC70 and 831, VDE 0560) without and with reactors.
Capacitor switching contactors are fitted with leading auxiliary contacts and damping resistors, to reduce the value of current peaks < 70 x I_e.
Operating conditions: Capacitor switching contactors are protected against welding for a prospective peak inrush current of 200 x I_e.
Capacitor switching contactors K3-..A can exclusively be used for switching capacitors with harmonic filter reactors.
Conformity: CE and UKCA

Other coil voltages on request

Auxiliary Contact Blocks

Article-No.	Type	Rated operational current			For contactors	Contacts		Weight approx.
		AC15 230 V [A]	400 V [A]	AC1 690 V [A]		NO	NC	[kg/pc.]
89-00294	HB11	3	2	10	K3-24… to K3-115…	1	1	0.02
89-00281	HN10	3	2	10	K3-18… to K3-115…	1	-	0.02

تسلاکالا
021-9102 6126 | teslakala.com

Dimensions

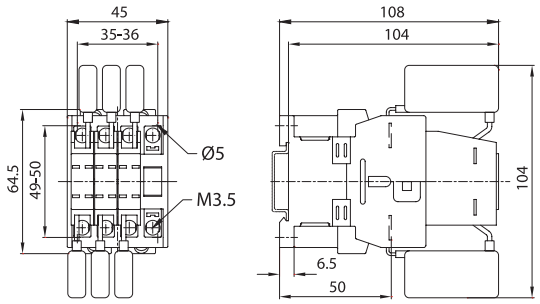

Dimensional drawing K3-18NBK

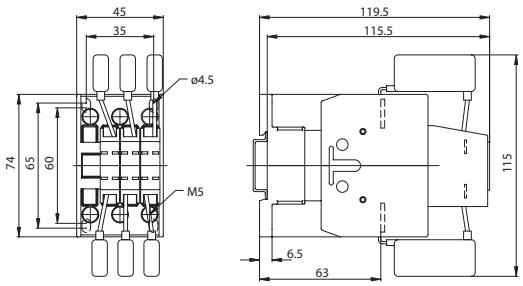

Dimensional drawing K3-24K00, K3-32K00

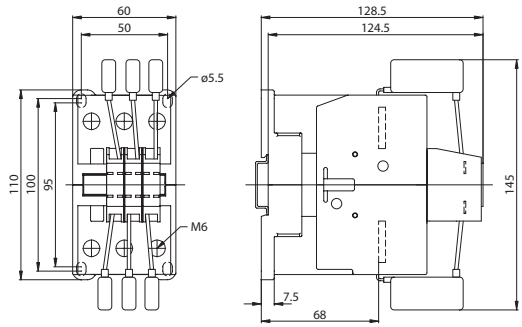

Dimensional drawing K3-50K00, K3-62K00, K3-74K00

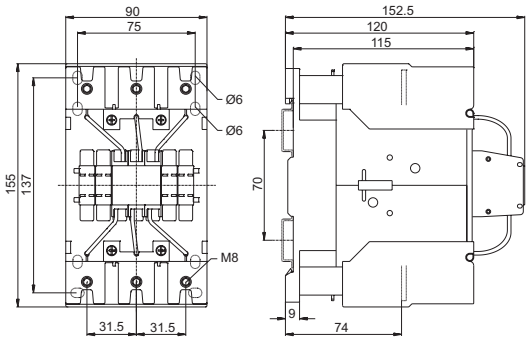

Dimensional drawing K3-90K00, K3-115K00

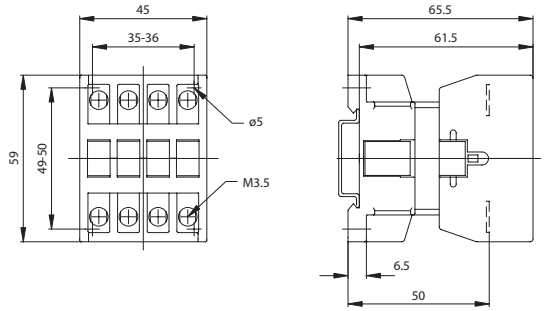

Dimensional drawing K3-18ND10

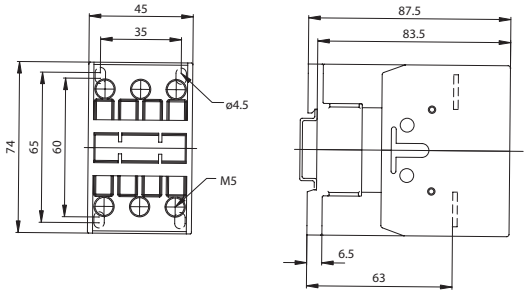

Dimensional drawing K3-24A00, K3-32A00

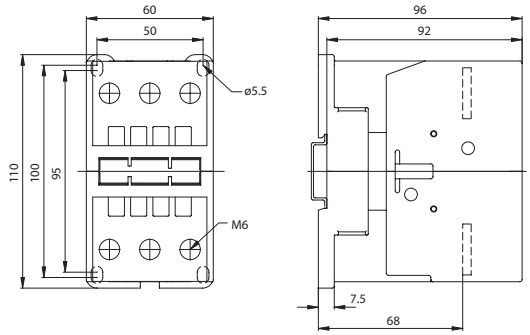

Dimensional drawing K3-50A00, K3-62A00, K3-74A00

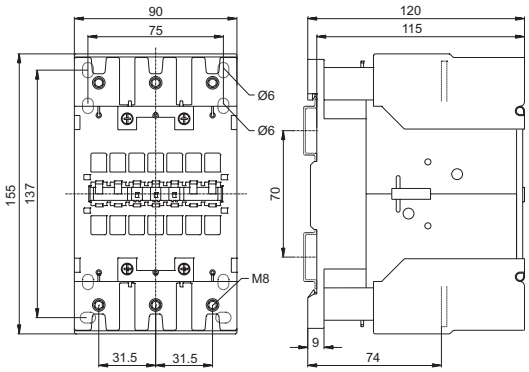

Dimensional drawing K3-90A00, K3-115A00

All dimensions in mm

Subject to technical changes / © FRAKO GmbH / www.frako.com

تسلاکالا
021-9102 6126 | teslakala.com





FR 3AC
Discharge Reactors

Fast and secure discharging of Power Capacitors with low-loss Discharge Reactors.

- Fast discharging of capacitors steps (< 5 seconds at 50 kvar / 400 V)
- 230 to 690 V rated operating voltage
- Three-phase design

Application Recommendations

Due to the integrated discharge resistors FRAKO Power Factor Correction Capacitors discharge within approx. 1 minute. The reconnection of a capacitor stage will be delayed due to the time a capacitor needs for discharging.
Some applications require a fast reconnection. Therefore, the time a capacitor needs to discharge has to be reduced. Discharge reactors safely discharge the capacitor within a few seconds.

تسلاکالا
021-9102 6126 | teslakala.com

Technical Data

	Discharge Reactor	
Type	FR3AC230-690V	FR3AC230-690V-G
Rated operating voltage	3AC 230 V – 690 V	3AC 230 V – 690 V
Frequency	50 – 60 Hz	50 – 60 Hz
Operating losses	< 5 W	< 5 W
No-load current	< 4.5 mA	< 4.5 mA
Inductance	70H	70H
Time of discharge	230 V: 25 kvar < 5 s. 50 kvar < 10 s. 400 V: 50 kvar < 5 s. 100 kvar < 10 s. 690 V: 100 kvar < 5 s.	230 V: 25 kvar < 5 s. 50 kvar < 10 s. 400 V: 50 kvar < 5 s. 100 kvar < 10 s. 690 V: 100 kvar < 5 s.
Permissible discharges	3 / min	3 / min
Temperature class	T40 / E	T40 / E
Ambient temperature	-25…+60 °C	-25…+60 °C
Protection class	IP00	IP40
Abutting cross section	0.75-2.5 mm²	0.75-2.5 mm²
Fixing torque	0.5 Nm	0.5 Nm
Total weight	0.5 kg	0.6 kg
Testing voltage	4 kV AC	4 kV AC
Standards	EN 61558-2-20	EN 61558-2-20
Dimensions in mm (W x H x D)	77 x 96 x 55	45 x 122 x 100
Mounting	Mounted directly on the module	Snap assembly on top hat rail
Article-No.	88-02013	88-02132

Dimensions

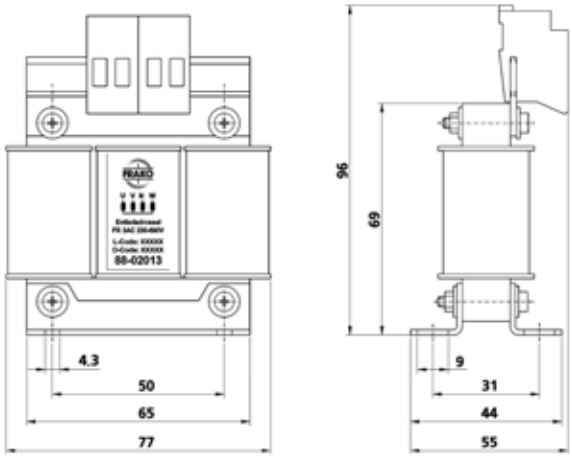

Dimensional drawing FR3AC230-690V

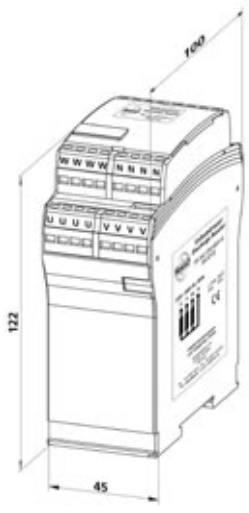

Dimensional drawing FR3AC230-690V-G

All dimensions in mm

Subject to technical changes / © FRAKO GmbH / www.frako.com

تسلاکالا
021-9102 6126 | teslakala.com

تسلاکالا
021-9102 6126 | teslakala.com

PFC Capacitors in sheet steel cases

2

Power Factor Correction Capacitors in sheet steel cases

Page 65

Power Factor Correction Capacitors in sheet steel cases – detuned

Page 71

Subject to technical changes / © FRAKO GmbH / www.frako.com

تسلاکالا
021-9102 6126 | teslakala.com



Power Factor Correction Capacitors in sheet steel cases

Power Capacitors type LKN and LKSLT for fixed compensation of, for example, motors and transformers.

	LKN	LKSLT
		
Sheet steel case	•	•
With terminal block	•	
Ingress protection IP54	•	
With fuse switch		•
Ingress protection IP 20		•

تسلاکالا
021-9102 6126 | teslakala.com

PFC Capacitors in sheet steel cases

Power Factor Correction Capacitors in sheet steel cases

Subject to technical changes / © FRAKO GmbH / www.frako.com

تسلاکالا
021-9102 6126 | teslakala.com



LKN / LKSLT
Power Factor Correction Capacitors in sheet steel cases

Power Capacitors type LKN and LKSLT for fixed compensation of, for example, motors and transformers.

- Power range: 7.5 to 100 kvar per case
- Ready for connection
- For floor installation or wall mounting
- Power Factor Correction Capacitors LKT dry-type with four safety features

Application Recommendations

Power Factor Correction Capacitors in sheet steel cases are mainly used for fixed compensation of motors and transformers. They are suitable for power factor correction in supply networks without harmonic distortion.

Attention: Even low harmonic levels can be amplified by network resonances. High harmonic levels can overload or damage all electrical devices and machines in the network.

Today, networks without harmonic distortion are quite rare. Therefore we generally recommend installing fixed capacitors with harmonic filter reactors.

تسلاکالا
021-9102 6126 | teslakala.com

PFC Capacitors in sheet steel cases

Power Factor Correction Capacitors in sheet steel cases

Power Range

Power Factor Correction Capacitors in sheet steel case:

- **LKN:** 7.5 to 100 kvar
- **LKSLT:** 7.5 to 40 kvar

Construction

Sheet steel case with plinth for floor mounting and lugs for wall mounting.

The case contains:

- Self-healing LKT type power capacitors with low loss self-healing dielectric made from segmented metallised polypropylene film. Filled with a PCB-free filler. With discharge resistors, as per EN 60831-1 and -2 as well as IEC 60831-1 and -2
- Fuse switch disconnector size NH00 (only available for **LKSLT**)

Installation Site

The place of installation must comply with the requirements of the ingress protection and ambient temperature concerned.

Regulations

For installation and connection of Power Factor Correction Capacitors in Germany the following regulations must be complied with: VDE 0100, VDE 0105, VDE 0560 Part 46 and VDE 0106 Part 100 (German Association of Electrical Engineers). In other countries the equivalent local regulations must be followed.

Connection

The supply cable enters the cabinet through a cable gland and is connected to the studs on the junction plate (**LKN**). In case of an **LKSLT** it is directly connected at the fuse switch disconnector.

Technical Data

Rated voltage	400 V / 50 Hz
Rated voltage of capacitors	440 V / 50 Hz
Ambient temperature	-10 °C to +45 °C
Humidity	Max. 90 %, no condensation
Case colour	RAL 7035
Standards	EN 60831-1 and -2 IEC 60831-1 and -2 EN 61921 IEC 61921 EN 61439-1 and -2 IEC 61439-1 and 2 UKCA

Important Notes

The presence of inductive and capacitive reactances in the low voltage network means that the harmonics generated there, together with those fed in from the medium voltage network, can be amplified many times over due to resonance. Particularly in industrial networks with loads that generate harmonics, the use of conventional power factor correction systems without Harmonic Filter Reactors is not advisable. Instead, detuned systems should be installed. See the LKNS and LKND series of detuned power capacitors.

For further information on power factor correction and harmonics please refer to our “Manual of Power Quality”.

Subject to technical changes / © FRAKO GmbH / www.frako.com

تسلاکالا
021-9102 6126 | teslakala.com

PFC Capacitors in sheet steel cases

Power Factor Correction Capacitors in sheet steel cases

Article-No.	Type	Rated power [kvar]	Rated capacity [µF]	Dimensions Width [mm]	Height [mm]	Depth [mm]	Cable gland	Weight approx. [kg]	Protection IP
Power Factor Correction Capacitors in sheet steel cases, rated mains voltage: 400 V / 50 Hz									
Type series: LKN									
31-30075	LKN 7.5-400-D32	7.5	3 x 49.7	150	380	80	PG 16	5	54
31-30100	LKN 10-400-D32	10	3 x 66.3	150	380	80	PG 16	6	54
31-30125	LKN 12.5-400-D32	12.5	3 x 82.9	220	380	80	PG 29	6	54
31-30150	LKN 15-400-D32	15	3 x 99.5	220	380	80	PG 29	7	54
31-30200	LKN 20-400-D32	20	3 x 132.6	250	450	150	PG 36	10	54
31-30250	LKN 25-400-D32	25	3 x 165.8	250	450	150	PG 36	10	54
31-30300	LKN 30-400-D32	30	3 x 198.9	250	450	150	PG 36	11	54
31-30400	LKN 40-400-D32	40	3 x 265.3	410	450	150	PG 42	15	54
31-30500	LKN 50-400-D32	50	3 x 331.6	410	450	150	PG 42	15	54
31-30600	LKN 60-400-D32	60	3 x 397.9	410	450	150	PG 42	16	54
31-30603	LKN 75-400-D32	75	3 x 497.4	525	500	195	PG 42	22	54
31-30604	LKN 80-400-D32	80	3 x 530.5	525	500	195	PG 42	23	54
31-30606	LKN 85-400-D32	85	3 x 563.7	525	500	195	PG 42	23	54
31-30605	LKN 100-400-D32	100	3 x 663.2	525	500	195	PG 42	25	54
Power Factor Correction Capacitors in sheet steel cases, with switch disconnector, rated mains voltage: 400 V / 50 Hz									
Type series: LKSLT									
31-21075	LKSLT 7.5-400-D30	7.5	3 x 49.7	410	410	184	PG 16	12	20
31-21100	LKSLT 10-400-D30	10	3 x 66.3	410	410	184	PG 16	15	20
31-21125	LKSLT 12.5-400-D30	12.5	3 x 82.9	410	410	184	PG 29	13	20
31-21150	LKSLT 15-400-D30	15	3 x 99.5	410	410	184	PG 29	15	20
31-21200	LKSLT 20-400-D30	20	3 x 132.6	410	410	184	PG 36	14	20
31-21250	LKSLT 25-400-D30	25	3 x 165.8	410	410	184	PG 36	16	20
31-21300	LKSLT 30-400-D30	30	3 x 198.9	410	410	184	PG 36	17	20
31-21400	LKSLT 40-400-D30	40	3 x 265.3	410	410	184	PG 42	17	20

Other rated voltages, frequencies and power ratings on request.

Recommended supply lead cross sections: please refer to the technical annex.

تسلاکالا
021-9102 6126 | teslakala.com

PFC Capacitors in sheet steel cases

Power Factor Correction Capacitors in sheet steel cases

Dimensions

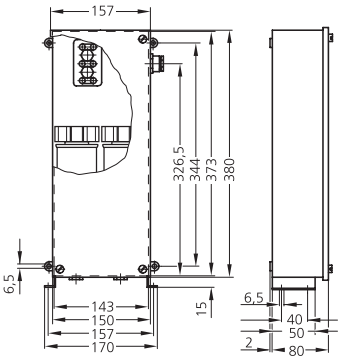

Dimensional drawing LKN
Case type 1
(7.5 to 10 kvar)

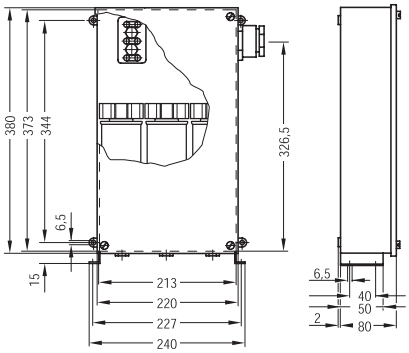

Dimensional drawing LKN
Case type 2
(12.5 to 15 kvar)

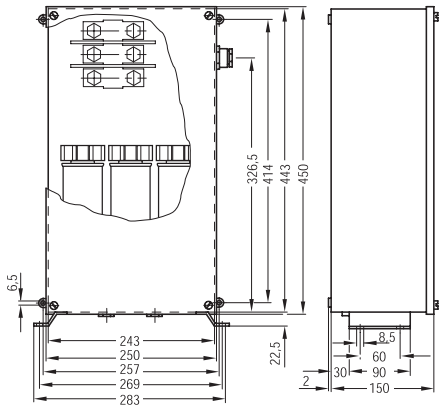

Dimensional drawing LKN
Case type 3
(20 to 30 kvar)

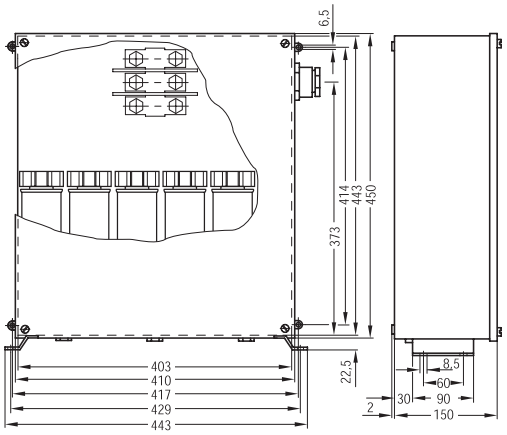

Dimensional drawing LKN
Case type 4
(40 to 60 kvar)

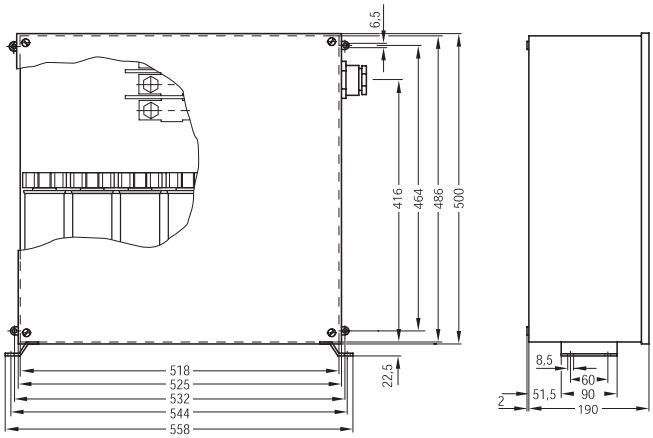

Dimensional drawing LKN
Case type 5
(75 to 100 kvar)

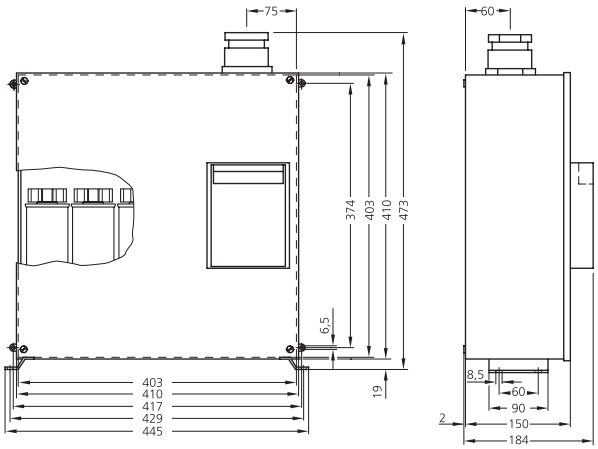

Dimensional drawing LKSLT
Case type 1 (7.5 to 40 kvar)

All dimensions in mm

Subject to technical changes / © FRAKO GmbH / www.frako.com

تسلاکالا
021-9102 6126 | teslakala.com



Power Factor Correction Capacitors in sheet steel cases – detuned

Power Capacitors type LKND-P and LKNS-P for fixed compensation of inductive consumers in networks with high harmonic content.

	LKND-P...	LKNS-P...
		
Sheet steel case	•	•
With capacitor switching contactors		•
Ingress protection IP20	•	•
Additional fuse switch (optional)	•	•

تسلاکالا
021-9102 6126 | teslakala.com

PFC Capacitors in sheet steel cases

Power Factor Correction Capacitors in sheet steel cases – detuned

Subject to technical changes / © FRAKO GmbH / www.frako.com

تسلاکالا
021-9102 6126 | teslakala.com



LKND-P / LKNS-P

Power Factor Correction Capacitors in sheet steel cases – detuned

Power Capacitors type LKND-P and LKNS-P for fixed compensation of inductive consumers in networks with high harmonic content.

- Power Range: 7.5 to 50 kvar per case
- Ready for connection
- Power Factor Correction Capacitors LKT dry-type with four safety features
- Low-loss harmonic filter reactors, type: Standard

Application Recommendations

Detuned Power Factor Correction Capacitors in sheet steel cases are mainly used for fixed compensation of motors and transformers.

They are suitable for compensation in supply networks with harmonic distortion according to EN 61000-2-4 class 2.
They are available as follows:

Version	Detuning factor	Resonance frequency
P1	p = 14 %	134 Hz
P7	p = 7 %	189 Hz
P8	p = 8 %	177 Hz

تسلاکالا
021-9102 6126 | teslakala.com

PFC Capacitors in sheet steel cases

Power Factor Correction Capacitors in sheet steel cases – detuned

Power Range

Power Factor Correction Capacitors in sheet steel case - detuned:

- **LKND-P:** 6.25 to 50 kvar
- **LKNS-P:** 10 to 50 kvar

Construction

Sheet steel case suitable for wall mounting or as freestanding cabinet (with socket, see accessories / options).

The case contains:

- Self-healing LKT type power capacitors with low loss self-healing dielectric made from segmented metallised polypropylene film. Filled with a PCB-free filler. With discharge resistors, as per EN 60831-1 and -2 as well as IEC 60831-1 and -2
- Low-loss harmonic filter reactors with thermal trip switch

The LKNS series furthermore contains:

- Capacitor switching contactors
- Control terminal strip with control fuse
- Control switch indicator light

Natural air cooling is ensured by appropriate cutouts in the door and on the roof.

Regulations

For installation and connection of Power Factor Correction Capacitors in Germany the following regulations must be complied with: VDE 0100, VDE 0105, VDE 0560 Part 46 and VDE 0106 Part 100 (German Association of Electrical Engineers). In other countries the equivalent local regulations must be followed.

Installation Site

The place of installation must comply with the requirements of the ingress protection and ambient temperature concerned.

Connection

The supply cable enters the cabinet from below and is connected to the studs of the junction plate.

Technical Data

Rated voltage	400 V / 50 Hz
Rated voltage of capacitors	440 V / 50 Hz
Ambient temperature	–10 °C to +40 °C
Humidity	Max. 90 %, no condensation
Case colour	RAL 7035
Standards	EN 60831-1 and -2 IEC 60831-1 and -2 EN 61921 IEC 61921 EN 61439-1 and -2 IEC 61439-1 and 2 UKCA

Important Notes

For further information on power factor correction and harmonics please refer to our “Manual of Power Quality”.

Subject to technical changes / © FRAKO GmbH / www.frako.com

تسلاکالا
021-9102 6126 | teslakala.com

PFC Capacitors in sheet steel cases

Power Factor Correction Capacitors in sheet steel cases – detuned

Type: LKND-P

Article-No.	Type	Rated power [kvar]	Rated capacity [µF]	Dimensions Width [mm]	Height [mm]	Depth [mm]	Weight approx. [kg]	Protection IP
Power Factor Correction Capacitors in sheet steel cases, detuned, rated mains voltage 400 V / 50 Hz Type series: LKND ...-P1 (Detuning factor p = 14 %)								
31-22097	LKND 6,25-400-2-P1	6.25	3 x 41.5	600	850	275	48	20
31-22010	LKND 10-400-2-P1	10	3 x 66.3	600	850	275	52	20
31-22011	LKND 12,5-400-2-P1	12.5	3 x 82.9	600	850	275	55	20
31-22012	LKND 15-400-2-P1	15	3 x 99.5	600	850	275	57	20
31-22013	LKND 20-400-2-P1	20	3 x 132.6	600	850	275	63	20
31-22014	LKND 25-400-2-P1	25	3 x 165.8	600	850	275	70	20
31-22015	LKND 30-400-2-P1	30	3 x 198.9	600	850	275	74	20
31-22016	LKND 40-400-2-P1	40	3 x 265.3	600	850	275	89	20
31-22017	LKND 50-400-2-P1	50	3 x 331.6	600	850	275	94	20
Power Factor Correction Capacitors in sheet steel cases, detuned, rated mains voltage 400 V / 50 Hz Type series: LKND ...-P7 (Detuning factor p = 7 %)								
31-22018	LKND 7,5-400-2-P7	7.5	3 x 49.7	600	850	275	48	20
31-22019	LKND 10-400-2-P7	10	3 x 66.3	600	850	275	49	20
31-22020	LKND 12,5-400-2-P7	12.5	3 x 82.9	600	850	275	49	20
31-22021	LKND 15-400-2-P7	15	3 x 99.5	600	850	275	54	20
31-22022	LKND 20-400-2-P7	20	3 x 132.6	600	850	275	54	20
31-22023	LKND 25-400-2-P7	25	3 x 165.8	600	850	275	57	20
31-22009	LKND 30-400-2-P7	30	3 x 198.9	600	850	275	63	20
31-22025	LKND 40-400-2-P7	40	3 x 265.3	600	850	275	65	20
31-22026	LKND 50-400-2-P7	50	3 x 331.6	600	850	275	72	20
Power Factor Correction Capacitors in sheet steel cases, detuned, rated mains voltage 400 V / 50 Hz Type series: LKND ...-P8 (Detuning factor p = 8 %)								
31-22035	LKND 7,5-400-2-P8	7.5	3 x 49.7	600	850	275	49	20
31-22072	LKND 10-400-2-P8	10	3 x 66.3	600	850	275	50	20
31-22102	LKND 12,5-400-2-P8	12.5	3 x 82.9	600	850	275	51	20
31-22071	LKND 15-400-2-P8	15	3 x 99.5	600	850	275	56	20
31-22080	LKND 20-400-2-P8	20	3 x 132.6	600	850	275	56	20
31-22081	LKND 25-400-2-P8	25	3 x 165.8	600	850	275	62	20
31-22046	LKND 30-400-2-P8	30	3 x 198.9	600	850	275	61	20
31-22086	LKND 40-400-2-P8	40	3 x 265.3	600	850	275	65	20
31-22063	LKND 50-400-2-P8	50	3 x 331.6	600	850	275	72	20

Other rated voltages, frequencies and power ratings on request.

Recommended supply lead cross sections: please refer to the technical annex (page 137 ff.).

Accessories

Article-No.	Type	Description
34-80196	KR-LSK-2/LKND/LKNS-200	base 200 mm (needed for floor installation)
S34-5525	LKND/LKNS	Version with protection class IP54
S34-5045	LKNS/LKND/LSP	Isolator switch complete for panel mounting

تسلاکالا
021-9102 6126 | teslakala.com

PFC Capacitors in sheet steel cases

Power Factor Correction Capacitors in sheet steel cases – detuned

Type: LKNS-P

Article-No.	Type	Rated power [kvar]	Rated capacity [µF]	Dimensions Width [mm]	Height [mm]	Depth [mm]	Weight approx. [kg]	Protection IP
Power Factor Correction Capacitors in sheet steel cases, detuned, rated mains voltage 400 V / 50 Hz Type series: LKNS ...-P1 (Detuning factor p = 14 %)								
31-21105	LKNS 10-400-2-P1	10	3 x 66.3	600	850	275	54	20
31-21133	LKNS 12,5-400-2-P1	12.5	3 x 82.9	600	850	275	61	20
31-21155	LKNS 15-400-2-P1	15	3 x 99.5	600	850	275	63	20
31-21212	LKNS 20-400-2-P1	20	3 x 132.6	600	850	275	65	20
31-21260	LKNS 25-400-2-P1	25	3 x 165.8	600	850	275	60	20
31-21311	LKNS 30-400-2-P1	30	3 x 198.9	600	850	275	74	20
31-21404	LKNS 40-400-2-P1	40	3 x 256.3	600	850	275	94	20
31-21505	LKNS 50-400-2-P1	50	3 x 331.6	600	850	275	98	20
Power Factor Correction Capacitors in sheet steel cases, detuned, rated mains voltage 400 V / 50 Hz Type series: LKNS ...-P7 (Detuning factor p = 7 %)								
31-21106	LKNS 10-400-2-P7	10	3 x 66.3	600	850	275	58	20
31-21127	LKNS 12,5-400-2-P7	12.5	3 x 82.9	600	850	275	58	20
31-21153	LKNS 15-400-2-P7	15	3 x 99.5	600	850	275	59	20
31-21211	LKNS 20-400-2-P7	20	3 x 132.6	600	850	275	60	20
31-21257	LKNS 25-400-2-P7	25	3 x 165.8	600	800	275	62	20
31-21309	LKNS 30-400-2-P7	30	3 x 198.9	600	850	275	64	20
31-21403	LKNS 40-400-2-P7	40	3 x 256.3	600	850	275	68	20
31-21503	LKNS 50-400-2-P7	50	3 x 331.6	600	850	275	72	20
Power Factor Correction Capacitors in sheet steel cases, detuned, rated mains voltage 400 V / 50 Hz Type series: LKNS ...-P8 (Detuning factor p = 8 %)								
31-21110	LKNS 10-400-2-P8	10	3 x 66.3	600	850	275	59	20
31-21126	LKNS 12,5-400-2-P8	12.5	3 x 82.9	600	850	275	59	20
31-21154	LKNS 15-400-2-P8	15	3 x 99.5	600	850	275	60	20
31-21216	LKNS 20-400-2-P8	20	3 x 132.6	600	850	275	61	20
31-21261	LKNS 25-400-2-P8	25	3 x 165.8	600	850	275	63	20
31-21312	LKNS 30-400-2-P8	30	3 x 198.9	600	850	275	65	20
31-21406	LKNS 40-400-2-P8	40	3 x 256.3	600	850	275	69	20
31-21504	LKNS 50-400-2-P8	50	3 x 331.6	600	850	275	63	20

Other rated voltages, frequencies and power ratings on request.

Recommended supply lead cross sections: please refer to the technical annex (page 137 ff.).

Accessories

Article-No.	Type	Description
34-80196	KR-LSK-2/LKND/LKNS-200	base 200 mm (needed for floor installation)
34-5525	LKND/LKNS	Version with protection class IP54
34-5045	LKNS/LKND/LSP	Isolator switch complete for panel mounting

Subject to technical changes / © FRAKO GmbH / www.frako.com

تسلاکالا
021-9102 6126 | teslakala.com

Dimensions

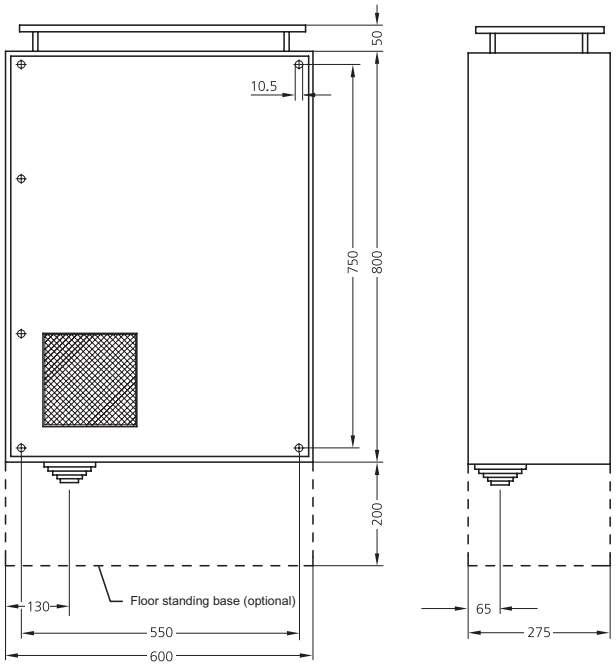

Dimensional drawing LKND-P (6.25 to 50 kvar)

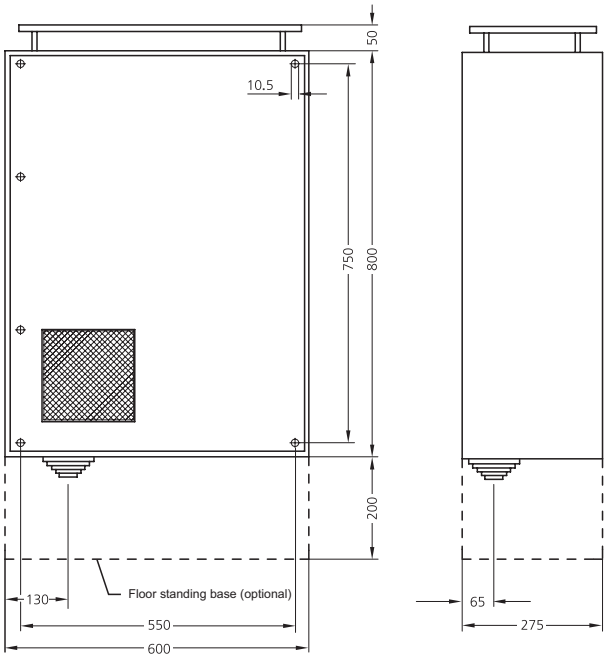

Dimensional drawing LKNS-P (10 to 50 kvar)

All dimensions in mm

تسلاکالا
021-9102 6126 | teslakala.com

PFC Systems on mounting plates / Capacitor Modules

Power Factor Correction Systems on mounting plates

Page 79

Power Factor Correction Systems on mounting plates – detuned

Page 85

Capacitor Modules

Page 89

Capacitor Modules – detuned

Page 93

Subject to technical changes / © FRAKO GmbH / www.frako.com

تسلاکالا
021-9102 6126 | teslakala.com



Power Factor Correction Systems on mounting plates

**PFC Systems on mounting plates for installation in standard switchboards.
Type LSPN is also suitable for installation in DIN standard distribution boards.**

	LSPN	LSP...-2...	LSP...-3...
			
Power range	17.5-60 kvar	68.75-100 kvar	112.5-200 kvar
Used for cabinets size (500 x 500 x 300 mm)	•		
Used for cabinets size (600 x 800 x 275 mm)		•	
Used for cabinets size (600 x 1200 x 300 mm)			•

تسلاکالا
021-9102 6126 | teslakala.com

Subject to technical changes / © FRAKO GmbH / www.frako.com

تسلاکالا
021-9102 6126 | teslakala.com







LSPN / LSP
Power Factor Correction Systems on mounting plates

PFC System on mounting plates for installation in standard switchboards.
Type LSPN is also suitable for installation in DIN standard distribution boards.

- Power Range: 17.5 to 200 kvar
- Compact design on a mounting plate
- Ready for connection (without control relay and relay cable)
- Power Factor Correction Capacitors LKT dry-type with four safety features

Application Recommendations

Power Factor Correction Systems on mounting plates type LSPN / LSP are suitable for installation in standard switchboards. Type LSPN is also suitable for installation in DIN standard distribution boards. Those systems are pre-wired. One only has to connect the Power Factor Correction Relay (not included) with the terminal strip. Those systems are suitable for power factor correction in networks without harmonic distortion.

Attention: Even low harmonic levels can be amplified by network resonances. High harmonic levels can overload or damage all electrical devices and machines in the network.

Today, networks without harmonic distortion are quite rare. Therefore we generally recommend installing fixed capacitors with Harmonic Filter Reactors.

تسلاکالا
021-9102 6126 | teslakala.com

PFC Systems on mounting plates / Capacitor Modules

Power Factor Correction Systems on mounting plates

Power Range

Power Factor Correction System on mounting plate:

- **LSPN -4:** 17.5 to 60 kvar
- **LSP -2:** 68.75 to 100 kvar
- **LSP -3:** 112.5 to 200 kvar

Construction

Mounting plate with mounted Power Factor Correction Capacitors. Capacitor Switching Contactors and fuses for installation in switchboards.

The system contains:

- Self-healing LKT type power capacitors with low-loss self-healing dielectric made from segmented metallised polypropylene film. Filled with a PCB-free filler. With discharge resistors, as per EN 60831-1 and -2 as well as IEC 60831-1 and -2
- Capacitor Switching Contactors with leading transition contact for damping of current peaks
- Fuse links, 3-pole, size NH00
- Control terminal strip with control fuse and thermal trip switch

Regulations

For installation and connection of Power Factor Correction Capacitors in Germany the following regulations must be complied with: VDE 0100, VDE 0105, VDE 0560 Part 46 and VDE 0106 Part 100 (German Association of Electrical Engineers). In other countries the equivalent local regulations must be followed.

Installation Site

The place of installation must comply with the requirements of the ingress protection and ambient temperature concerned.

Connection

The power cable is connected to the LV NH00 fuse element; The Power Factor Correction Relay (not included) as well as the cable from the current transformer has to be connected to the control terminal strip.

System Expansion

An extension of the system is possible by adding LSPZ extension units. This extension unit will be integrated in the existing control circuit via the control cable (supplied with the extension unit).

Technical Data

Rated voltage	400 V / 50 Hz
Rated voltage of capacitors	440 V / 50 Hz
Ambient temperature	–5 °C to +60 °C
Humidity	Max. 90 %, no condensation
Standards	EN 60831-1 and -2 IEC 60831-1 and -2 EN 61921 IEC 61921 EN 61439-1 and -2 IEC 61439-1 and 2 UKCA

Important Notes

The presence of inductive and capacitive reactances in the low voltage network means that the harmonics generated there, together with those fed in from the medium voltage network, can be amplified many times over due to resonance. Particularly in industrial networks with loads that generate harmonics, the use of conventional power factor correction systems without Harmonic Filter Reactors is not advisable. Instead, detuned systems should be installed. See the LSP-P series of Power Factor Correction Systems on mounting plates.

For further information on power factor correction and harmonics please refer to our “Manual of Power Quality”.

Subject to technical changes / © FRAKO GmbH / www.frako.com

تسلاکالا
021-9102 6126 | teslakala.com

Article-No.	Type	Rated power [kvar]	Step power [kvar]	Switching sequence	Dimensions Width [mm]	Height [mm]	Depth [mm]	Weight (gross) approx. [kg]	Protection IP
Power Factor Correction Systems on mounting plates, rated mains voltage: 400 V / 50 Hz Type series: LSPN ...-4									
34-57530	LSPN 17,5-2,5-111-400/440-4	17.5	2.5	1:2:4	450	450	260	13	00
34-57531	LSPN 27,5-2,5-112-400/440-4	27.5	2.5	1:2:4:4	450	450	260	14	00
34-57532	LSPN 30-5-11A-400/440-4	30	5	1:2:3	450	450	260	14	00
34-57533	LSPN 37,5-2,5-1111-400/440-4	37.5	2.5	1:2:4:8	450	450	260	16	00
34-57534	LSPN 37,5-7,5-12-400/480-4	37.5	7.5	1:2:2	450	450	260	15	00
34-57535	LSPN 43,75-6,25-111-400/440-4	43.75	6.25	1:2:4	450	450	260	15	00
34-57536	LSPN 46,88-3,13-1111-400/440-4	46.88	3.13	1:2:4:8	450	450	260	16	00
34-57537	LSPN 50-5-11A1-400/440-4	50	5	1:2:3:4	450	450	260	17	00
34-57538	LSPN 50-10-12-400/440-4	50	10	1:2:2	450	450	260	16	00
34-57539	LSPN 52,5-7,5-111-400/440-4	52.5	7.5	1:2:4	450	450	260	17	00
34-57540	LSPN 60-10-11A-400/440-4	60	10	1:2:3	450	450	260	18	00
Power Factor Correction Systems on mounting plates, rated mains voltage: 400 V / 50 Hz Type series: LSP ...-2									
34-57051	LSP 68,75-6,25-112-400/440-2	68.75	6.25	1:2:4:4	550	567.5	235	23	00
34-57052	LSP 75-6,25-212-400/440-2	75	6.25	1:1:2:4:4	550	567.5	235	25	00
34-57053	LSP 75-12,5-22-400/440-2	75	12.5	1:1:2:2	550	567.5	235	24	00
34-57054	LSP 87,5-12,5-111-400/440-2	87.5	12.5	1:2:4	550	567.5	235	25	00
34-57055	LSP 93,75-6,25-1111-400/440-2	93.75	6.25	1:2:4:8	550	567.5	235	25	00
34-57056	LSP 100-12,5-211-400/440-2	100	12.5	1:1:2:4	550	567.5	235	26	00
Power Factor Correction Systems, extension units on mounting plates, rated mains voltage: 400 V / 50 Hz Type series: LSPZ ...-2									
34-57100	LSPZ 50-50-1-400/440-2	50	50	1	550	567.5	235	18	00
34-57101	LSPZ 75-25-11-400/440-2	75	25	1:2	550	567.5	235	23	00
34-57102	LSPZ 100-50-2-400/440-2	100	50	1:1	550	567.5	235	25	00
Power Factor Correction Systems on mounting plates, rated mains voltage: 400 V / 50 Hz Type series: LSP ...-3									
34-57060	LSP 112,5-6,25-11AB-400/440-3	112.5	6.25	1:2:3:6:6	550	1157	240	55	00
34-57061	LSP 125-12,5-221-400/440-3	125	12.5	1:1:2:2:4	550	1157	240	55	00
34-57062	LSP 143,75-6,25-1112-400/440-3	143.75	6.25	1:2:4:8:8	550	1157	240	57	00
34-57063	LSP 150-12,5-212-400/440-3	150	12.5	1:1:2:4:4	550	1157	240	56	00
34-57064	LSP 150-25-22-400/440-3	150	25	1:1:2:2	550	1157	240	58	00
34-57065	LSP 175-25-13-400/440-3	175	25	1:2:2:2	550	1157	240	60	00
34-57066	LSP 187,5-12,5-113-400/440-3	187.5	12.5	1:2:4:4:4	550	1157	240	61	00
34-57067	LSP 200-12,5-213-400/440-3	200	12.5	1:1:2:4:4:4	550	1157	240	64	00
34-57068	LSP 200-25-23-400/440-3	200	25	1:1:2:2:2	550	1157	240	64	00
Power Factor Correction Systems, extension units on mounting plates, rated mains voltage: 400 V / 50 Hz Type series: LSPZ ...-3									
34-57103	LSPZ 150-50-3-400/440-3	150	50	1:1:1	550	1157	240	59	00
34-57104	LSPZ 200-50-4-400/440-3	200	50	1:1:1:1	550	1157	240	67	00

Other rated voltages, frequencies and power ratings on request.
Recommended supply lead cross sections: please refer to the technical annex.

For options and accessory equipment for PFC Systems on mounting plates, module rails, ordering examples and dimensional drawings see page 101 ff.

تسلاکالا
021-9102 6126 | teslakala.com

Subject to technical changes / © FRAKO GmbH / www.frako.com

تسلاکالا
021-9102 6126 | teslakala.com

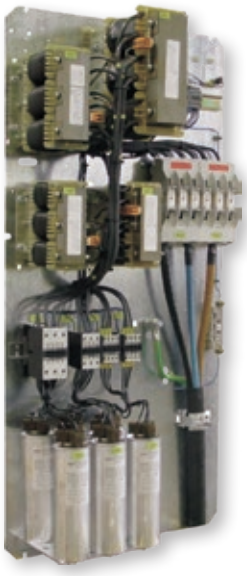

LSP-P

Power Factor Correction Systems on mounting plates – detuned

Detuned PFC Systems on mounting plates for installation in standard switchboards for low-voltage networks with harmonic content.

- Power range: 17.5 to 100 kvar
- Compact design on a mounting plate
- Ready for connection (without control relay and relay cable)
- Power Factor Correction Capacitors LKT dry-type with four safety features

Application Recommendations

Power Factor Correction Systems on mounting plates type LSP-P are suitable for installation in standard switchboards. Those systems are pre-wired. One only has to connect the Power Factor Correction Relay (not included) to the terminal strip.

They are suitable for supply networks with harmonic distortion according to EN 61000-2-4 class 2. They are available as follows:

Version	Detuning factor	Resonance frequency
P1	p = 14 %	134 Hz
P7	p = 7 %	189 Hz
P8	p = 8 %	177 Hz

تسلاکالا
021-9102 6126 | teslakala.com

PFC Systems on mounting plates / Capacitor Modules

Power Factor Correction Systems on mounting plates – detuned

Power Range

Power Factor Correction System on mounting plate - detuned:

- 17.5 to 100 kvar

Construction

Mounting plate with mounted Power Factor Correction Capacitors, Capacitor Switching Contactors and fuses for installation in switchboards.

The system contains:

- Self-healing LKT type power capacitors with low loss self-healing dielectric made from segmented metallised polypropylene film. Filled with a PCB-free filler. With discharge resistors, as per EN 60831-1 and -2 as well as IEC 60831-1 and -2
- Heavy duty Capacitor Switching Contactors
- Harmonic Filter Reactors with overtemperature switch
- Fuse links, 3-pole, size NH00
- Control terminal strip with control fuse and thermal contact for safety shutdown

Installation Site

The place of installation must comply with the requirements of the ingress protection and ambient temperature concerned.

Regulations

For installation and connection of Power Factor Correction Capacitors in Germany the following regulations must be complied with: VDE 0100, VDE 0105, VDE 0560 Part 46 and VDE 0106 Part 100 (German Association of Electrical Engineers). In other countries the equivalent local regulations must be followed.

Connection

The power cable is connected to the LV NH00 fuse element; The Power Factor Correction Relay (not included) as well as the cable from the current transformer has to be connected to the control terminal strip.

System Expansion

An extension of the system is possible by adding LSPZ-P extension units. This extension unit will be integrated in the existing control circuit via the control cable (supplied with the extension unit).

Technical Data

Rated voltage	400 V / 50 Hz
Rated voltage of capacitors	440 V / 50 Hz (-P7 and -P8) 480 V / 50 Hz (-P1)
Ambient temperature	–5 °C to +60 °C
Humidity	Max. 90 %, no condensation
Standards	EN 60831-1 and -2 IEC 60831-1 and -2 EN 61921 IEC 61921 EN 61439-1 and -2 IEC 61439-1 and 2 UKCA

Important Notes

For further information on power factor correction and harmonics please refer to our “Manual of Power Quality”.

Subject to technical changes / © FRAKO GmbH / www.frako.com

تسلاکالا
021-9102 6126 | teslakala.com

Version: P1 (Detuning factor p = 14 %)

Article-No.	Type	Rated power [kvar]	Step power [kvar]	Switching sequence	Dimensions Width [mm]	Height [mm]	Depth [mm]	Weight (gross) approx. [kg]	Protection IP
Power Factor Correction Systems on mounting plates, rated mains voltage: 400 V / 50 Hz Type series: LSP …-3-P1									
34-57791	LSP 21,88-3,13-111-400/480-3-P1	21,88	3,13	1:2:4	550	1157	240	67	00
34-57701	LSP 25-6,25-21-400/480-3-P1	25	6.25	1:1:2	550	1157	240	69	00
34-57702	LSP 31,25-6,25-12-400/480-3-P1	31.25	6.25	1:2:2	550	1157	240	75	00
34-57703	LSP 43,75-6,25-111-400/480-3- P1	43.75	6.25	1:2:4	550	1157	240	84	00
34-57704	LSP 50-6,25-211-400/480-3-P1	50	6.25	1:1:2:4	550	1157	240	98	00
34-57705	LSP 50-12,5-21-400/480-3-P1	50	12.5	1:1:2	550	1157	240	90	00
34-57707	LSP 62,5-12,5-12-400/480-3-P1	62.5	12.5	1:2:2	550	1157	240	105	00
34-57708	LSP 68,75-6,25-112-400/480-3- P1	68.75	6.25	1:2:4:4	550	1157	240	115	00
34-57852	LSP 75-12,5-11A-400/480-3-P1	75	12.5	1:2:3	550	1157	240	123	00
34-57710	LSP 75-25-11-400/480-3-P1	75	25	1:2	550	1157	240	121	00
34-57711	LSP 87,5-12,5-111-400/480-3-P1	87.5	12.5	1:2:4	550	1157	240	126	00
34-57781	LSP 100-16,67-11A-400/480-3-P1	100	16.67	1:2:3	550	1157	240	143	00
Power Factor Correction Systems, extension units on mounting plates, rated mains voltage: 400 V / 50 Hz Type series: LSPZ …-3-P1									
34-57900	LSPZ 50-50-1-400/480-3-P1	50	50	1	550	1157	240	83	00
34-57901	LSPZ 75-25-11-400/440-3-P1	75	25	1:2	550	1157	240	87	00

Other rated voltages, frequencies and power ratings on request.
Recommended supply lead cross sections: please refer to the technical annex.

تسلاکالا
021-9102 6126 | teslakala.com

PFC Systems on mounting plates / Capacitor Modules

Power Factor Correction Systems on mounting plates – detuned

Version: P7 (Detuning factor p = 7 %)

Article-No.	Type	Rated power [kvar]	Step power [kvar]	Switching sequence	Dimensions Width [mm]	Height [mm]	Depth [mm]	Weight (gross) approx. [kg]	Protection IP
Power Factor Correction Systems on mounting plates, rated mains voltage: 400 V / 50 Hz Type series: LSP …-3-P7									
34-57712	LSP 17,5-2,5-111-400/440-3-P7	17.5	2.5	1:2:4	550	1157	240	51	00
34-57713	LSP 25-5-12-400/440-3-P7	25	5	1:2:2	550	1157	240	57	00
34-57714	LSP 25-6,25-21-400/440-3-P7	25	6.25	1:1:2	550	1157	240	54	00
34-57715	LSP 30-5-11A-400/440-3-P7	30	5	1:2:3	550	1157	240	61	00
34-57716	LSP 31,25-6,25-12-400/440-3-P7	31.25	6.25	1:2:2	550	1157	240	59	00
34-57717	LSP 43,75-6,25-111-400/440-3- P7	43.75	6.25	1:2:4	550	1157	240	64	00
34-57718	LSP 50-6,25-211-400/440-3-P7	50	6.25	1:1:2:4	550	1157	240	72	00
34-57719	LSP 50-12,5-21-400/440-3-P7	50	12.5	1:1:2	550	1157	240	70	00
34-57721	LSP 52,5-7,5-111-400/440-3-P7	52.5	7.5	1:2:4	550	1157	240	79	00
34-57722	LSP 60-10-11A-400/440-3-P7	60	10	1:2:3	550	1157	240	79	00
34-57723	LSP 62,5-12,5-12-400/440-3-P7	62.5	12.5	1:2:2	550	1157	240	77	00
34-57724	LSP 68,75-6,25-112-400/440-3- P7	68.75	6.25	1:2:4:4	550	1157	240	82	00
34-57853	LSP 75-12,5-11A-400/440-3-P7	75	12.5	1:2:3	550	1157	240	88	00
34-57726	LSP 75-25-11-400/440-3-P7	75	25	1:2	550	1157	240	87	00
34-57727	LSP 87,5-12,5-111-400/440-3-P7	87.5	12.5	1:2:4	550	1157	240	89	00
34-57728	LSP 93,75-6,25-1111-400/440-3-P7	93.75	6.25	1:2:4:8	550	1157	240	96	00
34-57729	LSP 100-12,5-211-400/440-3-P7	100	12.5	1:1:2:4	550	1157	240	102	00
34-57730	LSP 100-50-2-400/440-3-P7	100	50	1:1	550	1157	240	105	00
34-57768	LSP 100-25-21-400/440-3-P7	100	25	1:1:2	550	1157	240	104	00
Power Factor Correction Systems, extension units on mounting plates, rated mains voltage: 400 V / 50 Hz Type series: LSPZ …-3-P7									
34-57902	LSPZ 50-50-1-400/440-3-P7	50	50	1	550	1157	240	65	20
34-57904	LSPZ 75-25-11-400/440-3-P7	75	25	1:2	550	1157	240	102	20
34-57906	LSPZ 100-50-2-400/440-3-P7	100	50	1:1	550	1157	240	99	20

Versions with an 8 % choke factor are available with the same corrective power and configuration of the capacitance stages.
Other rated voltages, frequencies and power ratings on request.
Recommended supply lead cross sections: please refer to the technical annex.

Subject to technical changes / © FRAKO GmbH / www.frako.com

تسلاکالا
021-9102 6126 | teslakala.com

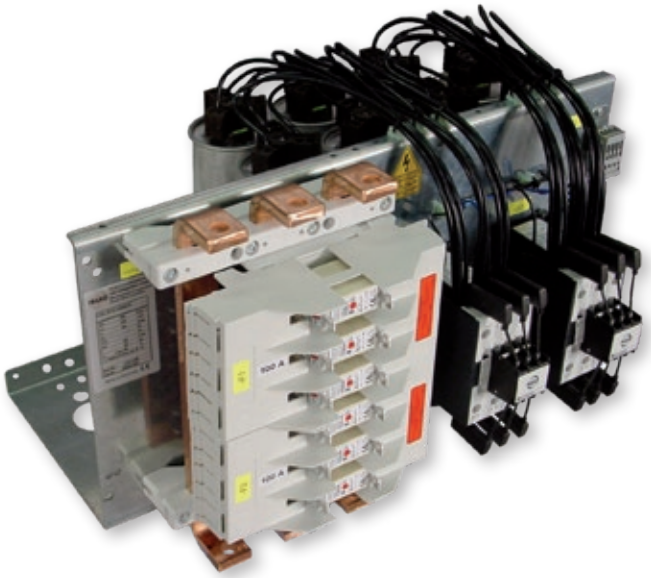

C64C / C84C
Capacitor Modules

Capacitor Modules type C64C and C84C for installation in standard switchgear systems. Suitable for low-voltage networks without harmonic distortion.

- Power Range: 25 to 100 kvar per module
- Compact design; up to 5 modules per cabinet
- Ideal for mounting in all common switchgear systems
- Easy and quick mounting with multifunctional rails
- Power Factor Correction Capacitors LKT dry-type with four safety features

Application Recommendations

Capacitor modules type C64C and C84C are suitable for installation in standard switchgear systems. Additional mounting rails for all common switchgear systems:

- W = 600 mm, D = 400, 500, 600 mm resp.
- W = 800 mm, D = 400, 500, 600 mm

allow an easy and quick installation of complex Power Factor Correction Systems.

They are suitable for power factor correction in supply networks without harmonic distortion.

Attention: Even low harmonic levels can be amplified by network resonances. High harmonic levels can overload or damage all electrical devices and machines in the network.

Today, networks without harmonic distortion are quite rare. Therefore we generally recommend installing fixed capacitors with harmonic filter reactors (page 81 ff.).

تسلاکالا
021-9102 6126 | teslakala.com

PFC Systems on mounting plates / Capacitor Modules

Power Range

Compact compensation module for installation in switchgear systems:

- 25 to 100 kvar

Construction

Sheet steel chassis with mounted power capacitors, contactors and fuses - ideal for mounting in all common switchgear systems.

The module consists of:

- Self-healing LKT type power capacitors with low loss self-healing dielectric made from segmented metallised polypropylene film. Filled with a PCB-free filler. With discharge resistors, as per EN 60831-1 and -2 as well as IEC 60831-1 and -2
- Capacitor Switching Contactors with leading transition contacts for damping of current peaks
- Busbar system with bus-mounting fuse bases, 3-pole, size NH00
- Control circuit with female connector (wired connector for connection with terminal strip incl.)

Application / Installation

The place of installation must comply with the requirements of the ingress protection and ambient temperature concerned.

Regulations

For installation and connection of Power Factor Correction Capacitors in Germany the following regulations must be complied with: VDE 0100, VDE 0105, VDE 0560 Part 46 and VDE 0106 Part 100 (German Association of Electrical Engineers). In other countries the equivalent local regulations must be followed.

Installation

Specific module rails are required for installation in the switchgear system. Those module rails are available for all common switchgear systems and can be supplied as an optional accessory.

Connection

The network connection can be done either vertically or horizontally. For the horizontal connection one has to connect the cables equipped with the cable lugs to the busbar by using the M12 screws.

A bus connection bracket CU AW-1 for vertical connection is available as an option.

Additional modules can be connected directly via the busbar system.

Technical Data

Design	Sheet steel chassis for installation in switchgear cabinets C6xC… for cabinets (width = 600 mm) C8xC… for cabinets (width = 800 mm)
Rated voltage	400 V/50 Hz
Rated voltage of capacitors	440 V/50 Hz
Ambient temperature	–5 °C to +60 °C
Humidity	Max. 90 %, no condensation
Standards	EN 60831-1 and -2 IEC 60831-1 and -2 EN 61921 IEC 61921 EN 61439-1 and -2 IEC 61439-1 and 2 UKCA

Important Notes

The presence of inductive and capacitive reactances in the low voltage network means that the harmonics generated there, together with those fed in from the medium voltage network, can be amplified many times over due to resonance. Particularly in industrial networks with loads that generate harmonics, the use of conventional power factor correction systems without Harmonic Filter Reactors is not advisable. Instead, detuned systems should be installed. See the C6xD... and C8xD... series of Capacitor Modules.

For further information on power factor correction and harmonics please refer to our “Manual of Power Quality”.

Subject to technical changes / © FRAKO GmbH / www.frako.com

تسلاکالا
021-9102 6126 | teslakala.com

Article-No.	Type	Rated power [kvar]	Step power [kvar]	Switching sequence	Dimensions Width [mm]	Height [mm]	Depth [mm]	Weight (gross) approx. [kg]	Protection IP
Capacitor Modules for installation in switchgear systems with a width of 600 mm, rated mains voltage: 400 V / 50 Hz Type series: C64C									
34-64167	C64C 25-3,13-211-400/440-64	25	3.13	1:1:2:4	500	300	350	15	00
34-64163	C64C 25-6,25-21-400/440-64	25	6.25	1:1:2	500	300	350	15	00
34-64164	C64C 25-12,5-2-400/440-64	25	12.5	1:1	500	300	350	15	00
34-64165	C64C 25-25-1-400/440-64	25	25	1	500	300	350	16	00
34-64170	C64C 31,25-6,25-12-400/440-64	31.25	6.25	1:2:2	500	300	350	16	00
34-64180	C64C 34,38-3,13-112-400/440-64	34.38	3.13	1:2:4:4	500	300	350	16	00
34-64172	C64C 37,5-6,25-22-400/440-64	37.5	6.25	1:1:2:2	500	300	350	16	00
34-64173	C64C 37,5-12,5-11-400/440-64	37.5	12.5	1:2	500	300	350	16	00
34-64177	C64C 43,75-6,25-111-400/440-64	43.75	6.25	1:2:4	500	300	350	17	00
34-64181	C64C 46,88-3,13-1111-400/440- 64	46.88	3.13	1:2:4:8	500	300	350	17	00
34-64288	C64C 50-3,13-2111-400/440-64	50	3.13	1:1:2:4:8	500	300	350	18	00
34-64182	C64C 50-6,25-211-400/440-64	50	6.25	1:1:2:4	500	300	350	18	00
34-64185	C64C 50-12,5-21-400/440-64	50	12.5	1:1:2	500	300	350	19	00
34-64186	C64C 50-25-2-400/440-64	50	25	1:1	500	300	350	19	00
34-64187	C64C 50-50-1-400/440-64	50	50	1	500	300	350	18	00
34-64193	C64C 62,5-12,5-12-400/440-64	62.5	12.5	1:2:2	500	300	350	19	00
34-64194	C64C 68,75-6,25-112-400/440-64	68.75	6.25	1:2:4:4	500	300	350	22	00
34-64196	C64C 75-12,5-22-400/440-64	75	12.5	1:1:2:2	500	300	350	23	00
34-64200	C64C 75-25-11-400/440-64	75	25	1:2	500	300	350	23	00
34-64203	C64C 87,5-12,5-111-400/440-64	87.5	12.5	1:2:4	500	300	350	24	00
34-64205	C64C 93,75-6,25-1111-400/440- 64	93.75	6.25	1:2:4:8	500	300	350	24	00
34-64206	C64C 100-12,5-211-400/440-64	100	12.5	1:1:2:4	500	300	350	26	00
34-64208	C64C 100-25-21-400/440-64	100	25	1:1:2	500	300	350	29	00
34-64188	C64C 100-50-2-400/440-64	100	50	1:1	500	300	350	24	00

Other rated voltages, frequencies and power ratings on request.
Recommended supply lead cross sections: please refer to the technical annex.

تسلاکالا
021-9102 6126 | teslakala.com

Article-No.	Type	Rated power [kvar]	Step power [kvar]	Switching sequence	Dimensions Width [mm]	Height [mm]	Depth [mm]	Weight (gross) approx. [kg]	Protection IP
Capacitor Modules for installation in switchgear systems with a width of 800 mm, rated mains voltage: 400 V / 50 Hz Type series: C84C									
34-64289	C84C 25-3,13-211-400/440-84	25	3.13	1:1:2:4	700	300	350	16	00
34-64290	C84C 25-6,25-21-400/440-84	25	6.25	1:1:2	700	300	350	16	00
34-64213	C84C 25-12,5-2-400/440-84	25	12.5	1:1	700	300	350	16	00
34-64214	C84C 25-25-1-400/440-84	25	25	1	700	300	350	17	00
34-64291	C84C 31,25-6,25-12-400/440-84	31.25	6.25	1:2:2	700	300	350	17	00
34-64292	C84C 34,38-3,13-112-400/440-84	34.38	3.13	1:2:4:4	700	300	350	17	00
34-64293	C84C 37,5-6,25-22-400/440-84	37.5	6.25	1:1:2:2	700	300	350	17	00
34-64215	C84C 37,5-12,5-11-400/440-84	37.5	12.5	1:2	700	300	350	18	00
34-64294	C84C 43,75-6,25-111-400/440-84	43.75	6.25	1:2:4	700	300	350	18	00
34-64295	C84C 46,88-3,13-1111-400/440- 84	46.88	3.13	1:2:4:8	700	300	350	19	00
34-64296	C84C 50-3,13-2111-400/440-84	50	3.13	1:1:2:4:8	700	300	350	19	00
34-64297	C84C 50-6,25-211-400/440-84	50	6.25	1:1:2:4	700	300	350	20	00
34-64217	C84C 50-12,5-21-400/440-84	50	12.5	1:1:2	700	300	350	20	00
34-64218	C84C 50-25-2-400/440-84	50	25	1:1	700	300	350	19	00
34-64219	C84C 50-50-1-400/440-84	50	50	1	700	300	350	20	00
34-64222	C84C 62,5-12,5-12-400/440-84	62.5	12.5	1:2:2	700	300	350	21	00
34-64298	C84C 68,75-6,25-112-400/440-84	68.75	6.25	1:2:4:4	700	300	350	21	00
34-64299	C84C 75-12,5-22-400/440-84	75	12.5	1:1:2:2	700	300	350	21	00
34-64224	C84C 75-25-11-400/440-84	75	25	1:2	700	300	350	21	00
34-64227	C84C 87,5-12,5-111-400/440-84	87.5	12.5	1:2:4	700	300	350	20	00
34-64229	C84C 93,75-6,25-1111-400/440- 84	93.75	6.25	1:2:4:8	700	300	350	22	00
34-64126	C84C 100-12,5-211-400/440-84	100	12.5	1:1:2:4	700	300	350	24	00
34-64232	C84C 100-25-21-400/440-84	100	25	1:1:2	700	300	350	27	00
34-64127	C84C 100-50-2-400/440-84	100	50	1:1	700	300	350	26	00

Other rated voltages, frequencies and power ratings on request.
Recommended supply lead cross sections: please refer to the technical annex.

For options and accessory equipment for PFC Systems on mounting plates, module rails, ordering examples and dimensional drawings see page 101 ff.

Subject to technical changes / © FRAKO GmbH / www.frako.com

تسلاکالا
021-9102 6126 | teslakala.com



C64D-P / C84D-P / C65D-P / C85D-P
Capacitor Modules – detuned

Capacitor Modules type C64D-P / C84D-P / C65D-P / C85D-P for installation in standard switchgear systems. Suitable for low-voltage networks with harmonic content.

- Power Range: 25 to 100 kvar per module
- Compact design - up to 5 modules per cabinet
- Ideal for mounting in all common switchgear systems
- Easy and quick mounting with multifunctional rails
- Power Factor Correction Capacitors LKT dry-type with four safety features

Application Recommendations

Capacitor modules type C64D-P, C65D-P, C84D-P and C85D-P are suitable for installation in standard switchgear systems. Additional mounting rails for all common switchgear systems:

- W = 600 mm, T = 400, 500, 600 mm resp.
- W = 800 mm, T = 400, 500, 600 mm

allow an easy and quick installation of complex Power Factor Correction Systems.

Suitable for supply networks with harmonic distortion according to EN 61000-2-4 class 2.

Available in the following versions:

Version	Detuning factor	Resonance frequency
P1	p = 14 %	134 Hz
P7	p = 7 %	189 Hz
P8	p = 8 %	177 Hz
P5	p = 5.67 %	210 Hz

تسلاکالا
021-9102 6126 | teslakala.com

PFC Systems on mounting plates / Capacitor Modules

Capacitor Modules – detuned

Power Range

Compact compensation module ideal for mounting in switchgear systems:

- 25 to 100 kvar

Construction

Sheet steel chassis with mounted power capacitors, contactors and fuses - ideal for mounting in all common switchgear systems.

The module consists of:

- Self-healing LKT type power capacitors with low-loss self-healing dielectric made from segmented metallised polypropylene film. Filled with a PCB-free filler. With discharge resistors, as per EN 60831-1 and -2 as well as IEC 60831-1 and -2
- Heavy duty Capacitor Switching Contactors
- Low-loss Harmonic Filter Reactors with temperature switches
- Busbar system with bus-mounting fuse base, 3-pole, size NH 00
- Control circuit with female connector (wired connector for connection with terminal strip incl.)

Installation Site

The place of installation must comply with the requirements of the ingress protection and ambient temperature concerned.

Regulations

For installation and connection of Power Factor Correction Capacitors in Germany the following regulations must be complied with: VDE 0100, VDE 0105, VDE 0560 Part 46 and VDE 0106 Part 100 (German Association of Electrical Engineers). In other countries the equivalent local regulations must be followed.

Installation

Specific module rails are required for installation in the switchgear system. Those module rails are available for all common switchgear systems and can be supplied as an optional accessory.

Connection

The network connection can be done either vertically or horizontally. For the horizontal connection one has to connect the cables equipped with the cable lugs to the busbar by using the M12 screws.

A bus connection bracket CU AW-1 for vertical connection is available as an option.

Additional modules can be connected directly via the busbar system.

Technical Data

Design	Sheet steel chassis for installation in switch-gear cabinets C6xD… for cabinets (width = 600 mm) C8xD… for cabinets (width = 800 mm)
Rated voltage	400 V/50 Hz
Rated voltage of capacitors	440 V/50 Hz (-P5 to -P8) 480 V/50 Hz (-P1)
Ambient temperature	–5 °C to +60 °C
Humidity	Max. 90 %, no condensation
Standards	EN 60831-1 and -2 IEC 60831-1 and -2 EN 61921 IEC 61921 EN 61439-1 and -2 IEC 61439-1 and 2 UKCA

Important Notes

For further information on power factor correction and harmonics please refer to our “Manual of Power Quality”.

Subject to technical changes / © FRAKO GmbH / www.frako.com

تسلاکالا
021-9102 6126 | teslakala.com

Version: P1 (Detuning factor p = 14 %)

Article-No.	Type	Rated power [kvar]	Step power [kvar]	Switching sequence	Dimensions Width [mm]	Height [mm]	Depth [mm]	Weight (gross) approx. [kg]	Protection IP
Capacitor Modules for installation in switchgear systems with a width of 600 mm, rated mains voltage: 400 V / 50 Hz Type series: C6xD …-P1									
34-64264	C64D 25-6,25-21-400/480-64-P1	25	6.25	1:1:2	500	300	350	57	00
34-64242	C64D 25-12,5-2-400/480-64-P1	25	12.5	1:1	500	300	350	45	00
34-64243	C64D 25-25-1-400/480-64-P1	25	25	1	500	300	350	49	00
34-65013	C65D 50-50-1-400/480-65-P1	50	50	1	500	300	450		00
34-64390	C66D 75-25-11-400/480-66-P1	75	25	1:1	500	300	550	85	00
Capacitor Modules for installation in switchgear systems with a width of 800 mm, rated mains voltage: 400 V / 50 Hz Type series: C8xD …-P1									
34-64069	C84D 25-6,25-21-400/480-84-P1	25	6.25	1:1:2	700	300	350	47	00
34-64070	C84D 25-12,5-2-400/480-84-P1	25	12.5	1:1	700	300	350	47	00
34-64039	C84D 25-25-1-400/480-84-P1	25	25	1	700	300	350	51	00
34-64271	C84D 31,25-6,25-12-400/480-84-P1	31.25	6.25	1:2:2	700	300	350	46	00
34-64018	C84D 37,5-12,5-11-400/480-84-P1	37.5	12.5	1:2	700	300	350	45	00
34-64002	C84D 43,75-6,25-111-400/480-84-P1	43.75	6.25	1:2:4	700	300	350	78	00
34-64003	C84D 50-12,5-21-400/480-84-P1	50	12.5	1:1:2	700	300	350	83	00
34-64004	C84D 50-25-2-400/480-84-P1	50	25	1:1	700	300	350	80	00
34-64005	C84D 50-50-1-400/480-84-P1	50	50	1	700	300	350	69	00
34-65011	C85D 75-25-11-400/480-85-P1	75	25	1:2	700	300	450		00
34-64040	C85D 100-50-2-400/480-85-P1	100	50	1:1	700	300	450	118	00

Other rated voltages, frequencies and power ratings on request.
Recommended supply lead cross sections: please refer to the technical annex.

Version: P7 (Detuning factor p = 7 %)

Article-No.	Type	Rated power [kvar]	Step power [kvar]	Switching sequence	Dimensions Width [mm]	Height [mm]	Depth [mm]	Weight (gross) approx. [kg]	Protection IP
Capacitor Modules for installation in switchgear systems with a width of 600 mm, rated mains voltage: 400 V / 50 Hz Type series: C6xD …-P7									
34-65138	C65D 25-3,13-211-400/440-65-P7	25	3.13	1:1:2:4	500	300	450	44	00
34-64257	C64D 25-6,25-21-400/440-64-P7	25	6.25	1:1:2	500	300	350	44	00
34-64262	C64D 25-12,5-2-400/440-64-P7	25	12.5	1:1	500	300	350	44	00
34-64245	C64D 25-25-1-400/440-64-P7	25	25	1	500	300	350	33	00
34-64301	C64D 31,25-6,25-12-400/440-64-P7	31.25	6.25	1:2:2	500	300	350	45	00
34-64246	C64D 37,5-12,5-11-400/440-64-P7	37.5	12.5	1:2	500	300	350	44	00
34-64247	C64D 43,75-6,25-111-400/440-64-P7	43.75	6.25	1:2:4	500	300	350	54	00
34-64248	C64D 50-12,5-21-400/440-64-P7	50	12.5	1:1:2	500	300	350	55	00
34-64249	C64D 50-25-2-400/440-64-P7	50	25	1:1	500	300	350	47	00
34-64250	C64D 50-50-1-400/440-64-P7	50	50	1	500	300	350	49	00
34-64261	C65D 75-25-11-400/440-65-P7	75	25	1:2	500	300	450	65	00

تسلاکالا
021-9102 6126 | teslakala.com

Article-No.	Type	Rated power [kvar]	Step power [kvar]	Switching sequence	Dimensions Width [mm]	Height [mm]	Depth [mm]	Weight (gross) approx. [kg]	Protection IP
Capacitor Modules for installation in switchgear systems with a width of 800 mm, rated mains voltage: 400 V / 50 Hz Type series: C8xD …-P7									
34-64071	C84D 25-6,25-21-400/440-84-P7	25	6.25	1:1:2	700	300	350	46	00
34-64072	C84D 25-12,5-2-400/440-84-P7	25	12.5	1:1	700	300	350	46	00
34-64015	C84D 25-25-1-400/440-84-P7	25	25	1	700	300	350	38	00
34-64339	C84D 31,25-6,25-12-400/440-84-P7	31.25	6.25	1:2:2	700	300	350	47	00
34-64303	C84D 34,38-3,13-112-400/440-84-P7	34.38	3.13	1:2:4:4	700	300	350	48	00
34-64304	C84D 37,5-6,25-22-400/440-84-P7	37.5	6.25	1:1:2:2	700	300	350	49	00
34-64073	C84D 43,75-6,25-111-400/440-84-P7	43.75	6.25	1:2:4	700	300	350	52	00
34-64305	C84D 46,88-3,13-1111-400/440-84-P7	46.88	3.13	1:2:4:8	700	300	350	57	00
34-64007	C84D 50-6,25-211-400/440-84-P7	50	6.25	1:1:2:4	700	300	350	50	00
34-64008	C84D 50-12,5-21-400/440-84-P7	50	12.5	1:1:2	700	300	350	60	00
34-64009	C84D 50-25-2-400/440-84-P7	50	25	1:1	700	300	350	55	00
34-64010	C84D 50-50-1-400/440-84-P7	50	50	1	700	300	350	52	00
34-64041	C84D 62,5-12,5-12-400/440-84-P7	62.5	12.5	1:2:2	700	300	350	55	00
34-64074	C84D 68,75-6,25-112-400/440-84-P7	68.75	6.25	1:2:4:4	700	300	350	56	00
34-64075	C84D 75-12,5-22-400/440-84-P7	75	12.5	1:1:2:2	700	300	350	59	00
34-64011	C84D 75-25-11-400/440-84-P7	75	25	1:2	700	300	350	71	00
34-64848	C84D 75-12,5-11A-400/440-84-P7	75	12.5	1:2:3	700	300	350	62	00
34-64012	C84D 87,5-12,5-111-400/440-84-P7	87.5	12.5	1:2:4	700	300	350	75	00
34-64648	C85D 100-12,5-211-400/440-85-P7	100	12.5	1:1:2:4	700	300	450	93	00
34-64013	C84D 100-25-21-400/440-84-P7	100	25	1:1:2	700	300	350	90	00
34-64014	C84D 100-50-2-400/440-84-P7	100	50	1:1	700	300	350	84	00

Versions with an 8 % choke factor are available with the same corrective power and configuration of the capacitance stages.
Other rated voltages, frequencies and power ratings on request.
Recommended supply lead cross sections: please refer to the technical annex.

Subject to technical changes / © FRAKO GmbH / www.frako.com

تسلاکالا
021-9102 6126 | teslakala.com

Version: P5 (Detuning factor p = 5.67 %)

Article-No.	Type	Rated power [kvar]	Step power [kvar]	Switching sequence	Dimensions Width [mm]	Dimensions Height [mm]	Dimensions Depth [mm]	Weight (gross) approx. [kg]	Protection IP
Capacitor Modules for installation in switchgear systems with a width of 800 mm, rated mains voltage: 400 V / 50 Hz Type series: C8xD …-P5									
34-64969	C84D 25-25-1-400/440-84-P5	25	25	1	700	300	350	58	00
34-64970	C84D 50-50-1-400/440-84-P5	50	50	1	700	300	350	67	00
34-64971	C84D 50-25-2-400/440-84-P5	50	25	1:1	700	300	350	80	00
34-64972	C84D 75-25-11-400/440-84-P5	75	25	1:2	700	300	350	98	00
34-64973	C85D 100-50-2-400/440-85-P5	100	50	1:1	700	300	450	120	00

Other rated voltages, frequencies and power ratings on request.
Recommended supply lead cross sections: please refer to the technical annex.

For options and accessory equipment for PFC Systems on mounting plates, module rails, ordering examples and dimensional drawings see page 101 ff.

تسلاکالا
021-9102 6126 | teslakala.com

Accessory equipment for PFC Systems and modules

Accessory equipment for PFC Systems on mounting plates

Page 99

Ordering examples

Page 107

Subject to technical changes / © FRAKO GmbH / www.frako.com

تسلاکالا
021-9102 6126 | teslakala.com



Accessory equipment for PFC Systems on mounting plates

Additional to Capacitor Modules type C or Power Factor Correction Systems on mounting plates type LSP, further components are required to assemble a Power Factor Correction System.
FRAKO offers accessory packages which contain all necessary components to assemble such a PFC-System. Those packages include:

- Power Factor Control Relays and accessories
- Mounting plates
- Module rails
- Ventilation packages
- Bus connection bracket

Power Factor Control Relays and accessories
For technical details on our Power Factor Control Relays please refer to chapter “Power Factor Control Relays”.
For the relays, FRAKO recommends to use suitable control terminal strips with control fuse and thermal trip contact for monitoring the cabinet temperature as well as the connecting cables for the relay.
All items can be ordered as single components or as a complete power factor control relay package.

تسلاکالا
021-9102 6126 | teslakala.com

Accessories

Article-No.	Type	Description
Power Factor Control Relays		
38-00320	RM 2106	With 6 control contacts
38-00340	RM 2112	With 12 control contacts
38-00402	PQC 0602401-0	With 6 control contacts, single-phase
38-00400	PQC 1202401-0	With 12 control contacts, single-phase
38-00417	PQC 0602401-20	With 6 control contacts, single-phase with Modbus RTU
38-00416	PQC 0602401-01	With 6 control contacts, single-phase with temperature and I/O extension
38-00418	PQC 0602401-21	With 6 control contacts, single-phase with Modbus RTU + temperature and I/O extension
38-00419	PQC 0602401-30	With 6 control contacts, single-phase with Modbus TCP
38-00420	PQC 0602401-31	With 6 control contacts, single-phase with Modbus TCP + temperature and I/O extension
38-00404	PQC 1202401-20	With 12 control contacts, single-phase with Modbus RTU
38-00403	PQC 1202401-01	With 12 control contacts, single-phase with temperature and I/O extension
38-00405	PQC 1202401-21	With 12 control contacts, single-phase with Modbus RTU + temperature and I/O extension
38-00408	PQC 1202401-30	With 12 control contacts, single-phase with Modbus TCP
38-00409	PQC 1202401-31	With 12 control contacts, single-phase with Modbus TCP + temperature and I/O extension
39-29060	PFC-12TR-1	With 24 control contacts, 12 relays / 12 transistors
39-29061	PFC-12TR-1-RS485	With 24 control contacts, 12 relays / 12 transistors + RS485 interface
Control terminal strip with thermal trip contact, premounted		
34-80399	RKL-PQC-6/1	Suitable for PQC with 6 control contacts, single-phase
34-80400	RKL-PQC-12/1	Suitable for PQC with 12 control contacts, single-phase
34-80027	RKL-Z-Schrank	For extension units (only 12 control contacts)
Control cable set, prefabricated for the connection between power factor control relay and control terminal strip RKL		
34-80407	RKS-PQC 6-1300	For connection of PQC with 6 control contacts, single-phase, cable length 1.3 m
34-80409	RKS-PQC 6-2400	For connection of PQC with 6 control contacts, single-phase, cable length 2.4 m
34-80406	RKS-PQC 12-1300	For connection of PQC with 12 control contacts, single-phase, cable length 1.3 m
34-80410	RKS-PQC 12-2400	For connection of PQC with 12 control contacts, single-phase, cable length 2.4 m
89-20559	SS 12-6000	For connecting the basic unit with the extension unit (length: 6 m)

Power Factor Control Relay packages (premounted and wired), consisting of:
Power Factor Control Relay, control terminal strip, set of relay cables and optional modules

Article-No.	Type	Description
Cable set 1.300 mm, PQC single-phase, 12 control contacts		
34-72109	STR-PQC 650-1300	Basic version (incl. controller 38-00400)
34-72128	STR-PQC 652-1300	With Modbus RTU (incl. controller 38-00404)
34-72130	STR-PQC 651-1300	With temperature I/O (incl. controller 38-00403)
34-72172	STR-PQC 654-1300	With Modbus TCP (incl. controller 38-00408)
Cable set 1.300 mm, PQC single-phase, 6 control contacts		
34-72108	STR-PQC 620-1300	Basic version (incl. controller 38-00402)
34-72127	STR-PQC 622-1300	With Modbus RTU (incl. controller 38-00417)
34-72129	STR-PQC 621-1300	With temperature I/O (incl. controller 38-00416)
34-72173	STR-PQC 624-1300	With Modbus TCP (incl. controller 38-00419)
Cable set 2.400 mm, PQC single-phase, 12 control contacts		
34-72111	STR-PQC 650-2400	Basic version (incl. relay 38-00400)
34-72134	STR-PQC 652-2400	With Modbus RTU (incl. controller 38-00404)
34-72136	STR-PQC 651-2400	With temperature I/O (incl. controller 38-00403)
34-72174	STR-PQC 654-2400	With Modbus TCP (incl. controller 38-00408)

Subject to technical changes / © FRAKO GmbH / www.frako.com

تسلاکالا
021-9102 6126 | teslakala.com

Accessory equipment for PFC Systems and modules

Accessory equipment for PFC Systems on mounting plates

Article-No.	Type	Description
Cable set 2.400 mm, PQC single-phase, 6 control contacts		
34-72110	STR-PQC 620-2400	Basic version (incl. controller 38-00402)
34-72133	STR-PQC 622-2400	With Modbus RTU (incl. controller 38-00417)
34-72135	STR-PQC 621-2400	With temperature I/O (incl. controller 38-00416)
34-72175	STR-PQC 624-2400	With Modbus TCP (incl. controller 38-00419)
Additional Power Factor Control Relay packages:		
34-72214	STR-PFC 12TR-1-2400	PFC-12TR-1, control terminal strip, cable set 2.4 m
34-72215	STR-PFC 12TR-1-RS485-2400	PFC-12TR-1-RS485, control terminal strip, cable set 2.4 m
34-72155	STR-PQC 652-1300 with BU-PROFIBUS DP	PQC 652 with bus converter PROFIBUS DP, cable length 1.3 m
34-72166	STR-PQC 652-1300 with BU-PROFINET	PQC 652 with bus converter PROFINET, cable length 1.3 m
34-80056	SBS-PS 24 VDC-0.63 A	Power supply unit (24 VDC / 0.63 A output) for actuating the electronic switches
Mounting plates for control terminal strip, control transformers etc.		
34-80069	SB-C6	For cabinets width 600 mm
34-80053	SB-C8	For cabinets width 800 mm

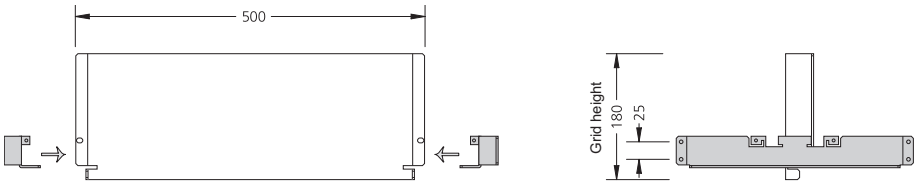

Dimensional drawing SB-C6 with module rail

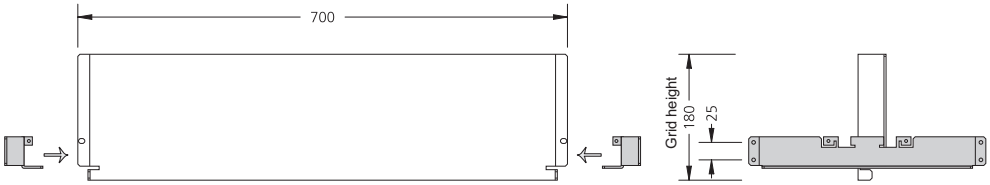

Dimensional drawing SB-C8 with module rail

Article-No.	Type	Description
Ventilation packages, consisting of:		
34-80096	LP–LSFC-I IP20-6/1	1 pc roof vent, installation in cabinet, 1 pc air inlet filter and thermostat
34-80285	LP-LSFC-A IP43-7/1	1 pc roof vent, installation outside of the cabinet, 1 pc air inlet filter and thermostat
34-80379	LP-LSFC-IP54	1 pc door vent, installation in cabinet, 1 pc air inlet filter and thermostat
Bus connection bracket		
34-80006	CU AW-1	Busbar bracket set for cable connection, complete with fixing screws and protection against accidential contact
34-80114	Final cover complete	Protection against accidental contact (module packages do not include CU-AW 1)

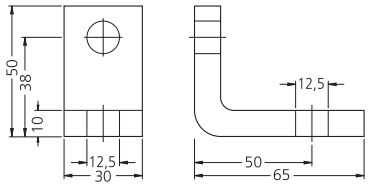

Dimensional drawing CU AW-1

All dimensions in mm

تسلاکالا
021-9102 6126 | teslakala.com

Selection of module rails for the most common switchgear systems

Article-No.	Manufacturer of cabinet	Cabinet type	Cabinet width [mm]	Cabinet depth [mm]
34-80051	ABB	MNS (with distribution busbars)	800	600
34-80176	ABB	MNS (without distribution busbars)	800	600
34-80128	ABB	RNS	800	600
34-80389	ABB	ARTU K	920	637
34-80384	ABB	PRO E POWER	700/900	600
34-80211	ABN	BST312	830	525
34-80133	AEG	EVS	800	400
34-80180	AEG	EVS	800	600
34-80071	CEGELEC	Intermas	800	500
34-80072	CEGELEC	Intermas	800	600
34-80179	DESSAUER	Dessa Norm	800	600
34-80201	DESSAUER	Dessa Norm	800	800
34-80039	EATON / MOELLER	IVS1600	800	400
34-80071	EATON / MOELLER	IVS1600	800	500
34-80072	EATON / MOELLER	IVS1600	800	600
34-80138	EATON / MOELLER	SVTL	800	400
34-80130	EATON / MOELLER	SVTL	800	600
34-80173	EATON / MOELLER	xEnergy (with distribution busbars)	800	600
34-80174	EATON / MOELLER	xEnergy (without distribution busbars)	800	600
34-80148	ELDON	MCS	800	400
34-80152	ELDON	MCS	800	500
34-80233	ELDON	MCS	800	600
34-80067	ELEK	UR / URV	800	400
34-80105	ELEK	UR / URV	800	600
34-80073	ELEK	UR / URV	800	800
34-80059	ELEK	UR / URV	850	400
34-80050	ELEK	UR / URV	850	600
34-80132	ELEK	UR / URV	850	800
34-80120	ELIN-EBG	ELIN-EBG SV	800	600
34-80120	ELIN-EBG	SVT	800	600
34-80172	ELSTEEL	Elsteel	800	600
34-80147	ELSTEEL	Elsteel	800	800
34-80238	ELSTEEL	Elsteel (with busbar space)	800	600
34-80040	FRAKO	LSFC and GE(AEG) SEN	600/800	400
34-80041	FRAKO	LSFC	600/800	500
34-80042	FRAKO	LSFC and GE(AEG) SEN	600/800	600
34-80253	GE	VPS STEEL	800	400
34-80181	HAGER	Hager FG22	600	600
34-80214	HAGER	Hager FG23	850	400
34-80055	HENSEL	SAS 2000 (frame assembly)	850	500
34-80168	HENSEL	SAS 2000 (M. Plate brackets reinforced assembly)	600	500
34-80190	HENSEL	SAS 2000 (M. Plate brackets reinforced assembly)	850	500
34-80154	ISA	ISA 2000	800	800
34-80119	LÖGSTRUP	Cabinet is only suitable for C6X modules	760	570

Subject to technical changes / © FRAKO GmbH / www.frako.com

تسلاکالا
021-9102 6126 | teslakala.com

Accessory equipment for PFC Systems and modules

Accessory equipment for PFC Systems on mounting plates

Article-No.	Manufacturer of cabinet	Cabinet type	Cabinet width [mm]	Cabinet depth [mm]
34-80077	LÖGSTRUP	Cabinet is only suitable for C6X modules	760	760
34-80227	LOHMEIER	RS	800	600
34-80228	LOHMEIER	RS	800	800
34-80198	MEHLER	ARM-C	800	400
34-80106	MEHLER	SRM-C	800	600
34-80097	MONA	MONA 5000	800	400
34-80098	MONA	MONA 5000	800	600
34-80245	MONA	MONA 5000	800	800
34-80047	RITTAL	ES4... / PS4…	600/800	400
34-80048	RITTAL	ES4... / PS4…	600/800	500
34-80049	RITTAL	ES4... / PS4…	600/800	600
34-80293	RITTAL	ES4... / PS4…	600/800	800
34-80040	RITTAL	TS8…	600/800	400
34-80041	RITTAL	TS8…	600/800	500
34-80042	RITTAL	TS8…	600/800	600
34-80137	RITTAL	TS8…	600/800	800
34-80435	RITTAL	VX25	600/800	400
34-80436	RITTAL	VX25	600/800	500
34-80437	RITTAL	VX25	600/800	600
34-80438	RITTAL	VX25	600/800	800
34-80134	SAREL	S6000	800	500
34-80237	SAREL	S6000	800	600
34-80291	SCHNEIDER	Prisma P	650	600
34-80284	SCHNEIDER	Prisma P (with busbar space)	800	600
34-80070	SIEMENS	Sivacon 8PT	800	600
34-80155	SIEMENS	Sivacon 8PT	800	800
34-80223	SIEMENS	Sivacon 8PT	850	600
34-80153	SIEMENS	Sivacon 8PT (with distribution busbars)	800	600
34-80255	SIEMENS	Sivacon S8 (Siemens S8- compensation section with busbar terminals on the rear side)	800	600
34-80252	SIEMENS	Sivacon S8 (normal section. FRAKO diassembling without busbar terminals on the rear side)	800	600
34-80076	STRIEBEL&JOHN	2/8XA4	600	400
34-80115	STRIEBEL&JOHN	2/8XA6	600	600
34-80104	STRIEBEL&JOHN	3/8XA4	850	400
34-80061	STRIEBEL&JOHN	3/8XA6	850	600
34-80222	STRIEBEL&JOHN	3/8XA8	850	800
34-80251	STRIEBEL&JOHN	Triline-R	614	425
34-80212	STRIEBEL&JOHN	Triline-R	614	625
34-80182	STRIEBEL&JOHN	Triline-R	864	425
34-80141	STRIEBEL&JOHN	Triline-R	864	625
34-80250	STRIEBEL&JOHN	Triline-R	864	825
34-80498	SEDOTEC	Vamocon and Vamocon 1250 (new)	850	625
34-80269	WEBER	MES	800	600
34-80178	WEBER	PM8	800	400

تسلاکالا
021-9102 6126 | teslakala.com

Accessory equipment for PFC Systems and modules

Accessory equipment for PFC Systems on mounting plates

Article-No.	Manufacturer of cabinet	Cabinet type	Cabinet width [mm]	Cabinet depth [mm]
34-80129	WEBER	PM8	800	500
34-80218	WEBER	PM8	800	600

Other module rails on request

Dimensions

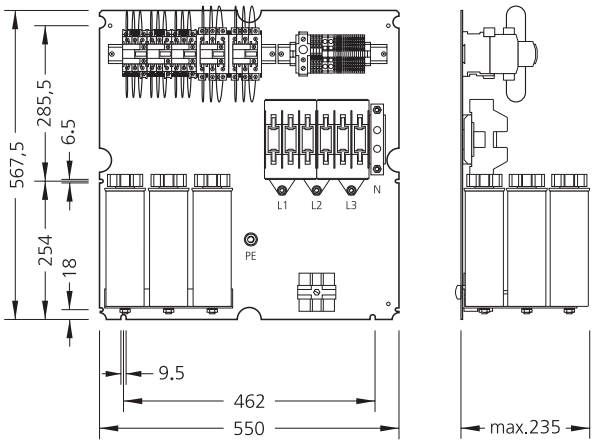

Dimensional drawing LSP-2 (68.75-100 kvar)

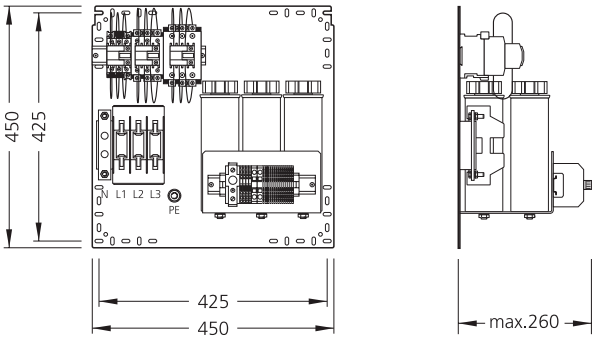

Dimensional drawing LSPN-4 (17.5-60 kvar)

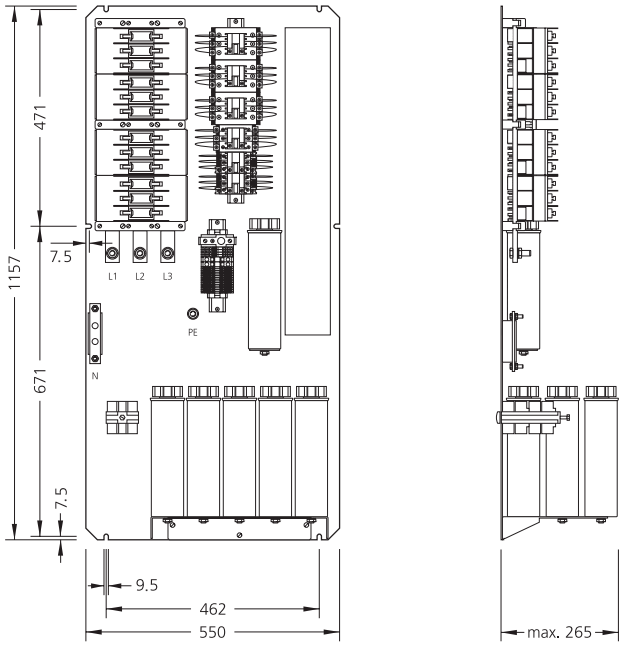

Dimensional drawing LSP-3 (112.5-200 kvar)

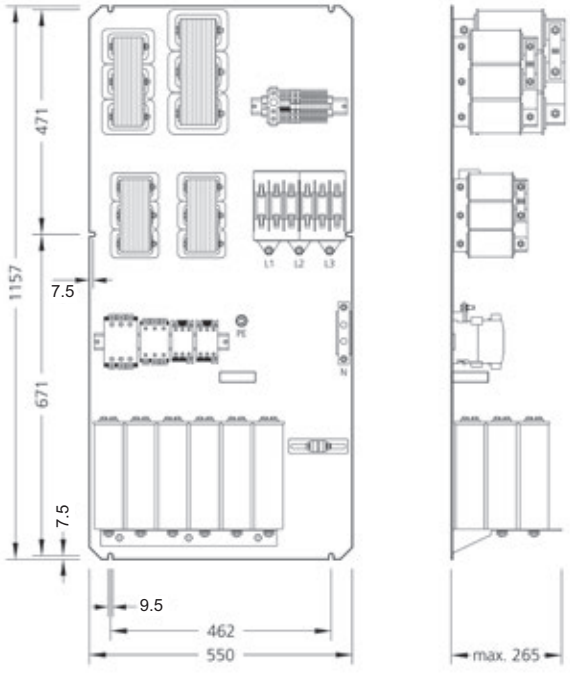

Dimensional drawing LSP-P (17.5-100 kvar)

All dimensions in mm

Subject to technical changes / © FRAKO GmbH / www.frako.com

تسلاکالا
021-9102 6126 | teslakala.com

Dimensions

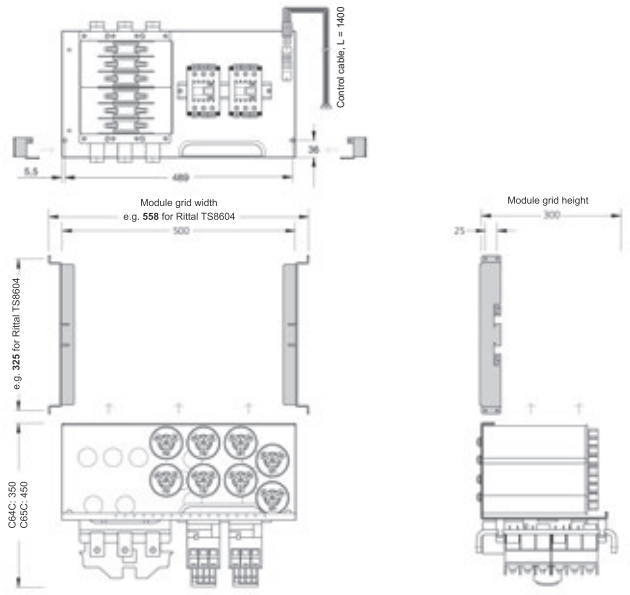

Dimensional drawing type series C64C (25 to 100 kvar) with module rails (here: MT-C6-Rittal VX 8604)

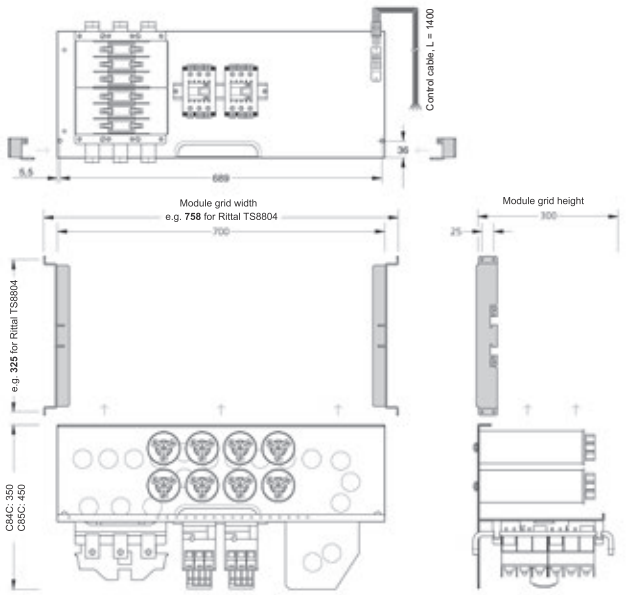

Dimensional drawing type series C84C (25 to 100 kvar) with module rails (here: MT-C8-Rittal VX 8804)

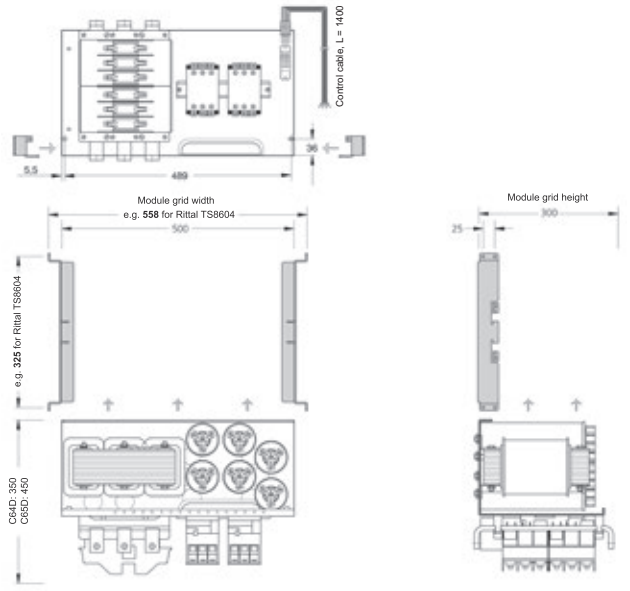

Dimensional drawing type series C64D (25 to 100 kvar) with module rails (here: MT-C6-Rittal VX 8604)

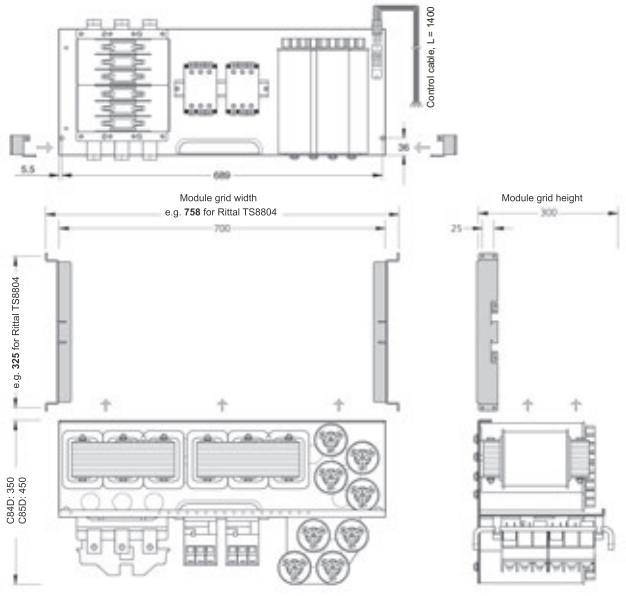

Dimensional drawing type series C84D (25 to 100 kvar) with module rails (here: MT-C8-Rittal VX 8804)

All dimensions in mm

تسلاکالا
021-9102 6126 | teslakala.com

Accessory equipment for PFC Systems and modules

Accessory equipment for PFC Systems on mounting plates

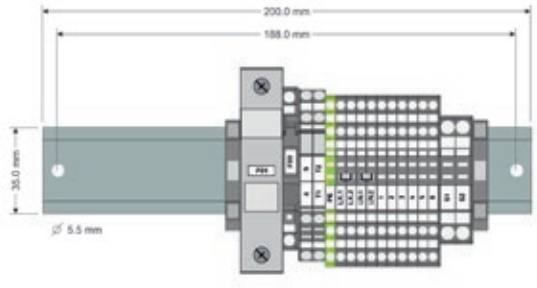

RKL-PQC-6-1

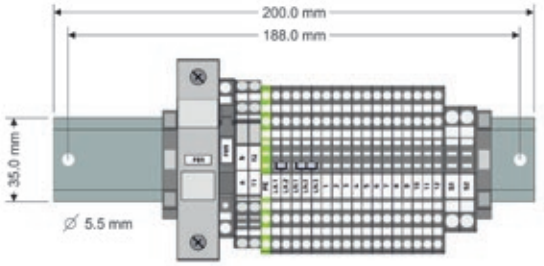

RKL-PQC-12-1

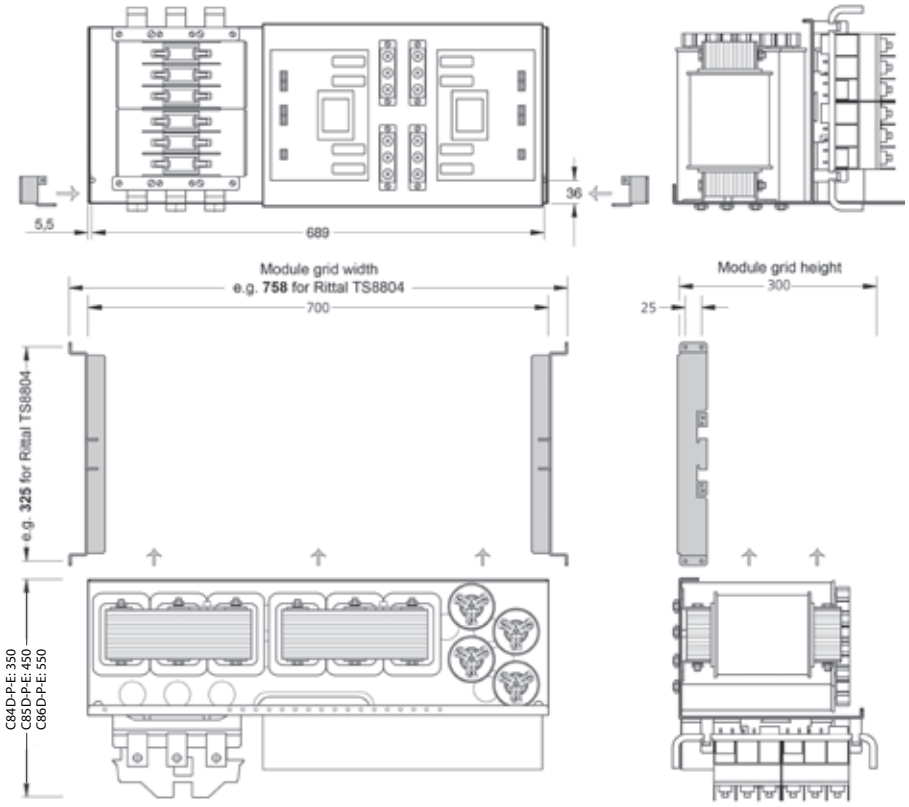

Dimensional drawing type C84D-P-E / C85D-P-E / C86D-P-E (25 to 100 kvar)
with module rails (here: MT-C8-Rittal VX 8804)

Subject to technical changes / © FRAKO GmbH / www.frako.com

تسلاکالا
021-9102 6126 | teslakala.com

Ordering examples

Example of mounting plates without detuning for installation in enclosure systems supplied by others

Selection criteria:

- **1. Selecting the modules:**

The mounting plates are selected according to:
— Required corrective power (max. 200 kvar)
— Required stage corrective power,
smallest required stage corrective power

e.g. 150 kvar total corrective power with 12.5 kvar stages

Typical type specification: LSP 150–12,5–212–400/440–3
see page 71

- **2. Selecting the required accessories:**

e.g.:
— Control cable set (with the required length)
(e.g. RKS-PQC 6-1300, with 1500 mm total length)
see page 88

- **3. Selecting the required reactive power control relay:**

The control relay is selected to suit the number of switchable stages and additional functions required:
— up to 6 switchable stages: 6-stage control relay
(e.g. PQC 0602401-0)
— up to 12 switchable stages: 12-stage control relay
(e.g. PQC 1202401-0)
see page 88

Ordering example 1

- **Description:**

Example: Installation of mounting plate without detuning, with the following specifications, in an existing sheet steel cabinet:
— **Total corrective power: 150 kvar, 400 V, 50 Hz**
Stage corrective power: 12.5 kvar
— **6-stage reactive power control relay**
— **Control cable set 1300 mm long (1500 mm total length)**

Article-No.	Description	Quantity
34-57063	LSP 150-12,5-212-400/440-3	1
92-11303	Control cable set: RKS-PQC 6-1300	1
38-00402	Control relay: PQC 0602401-0	1

Ordering example 2

- **Description:**

Example: Installation of mounting plate without detuning, with the following specifications, in an existing sheet steel cabinet:
— **Total corrective power: 43.75 kvar, 400 V, 50 Hz**
Stage corrective power: 6.25 kvar
— **6-stage reactive power control relay**
— **Control cable set 1300 mm long (1500 mm total length)**

Article-No.	Description	Quantity
34-57535	LSPN 43,75-6,25-111-400/440–4	1
92-11303	Control cable set: RKS-PQC 6-1300	1
38-00402	Control relay: PQC 0602401-0	1

تسلاکالا
021-9102 6126 | teslakala.com

Ordering examples

Example of module packages without detuning for installation in enclosure systems supplied by others

Selection criteria:

- **1. Selecting the modules:**

The modules are selected according to:
— Required number and size of the stages, smallest required stage corrective power
— The planned enclosure system with its available dimensions

e.g. 100 kvar with 2 x 50 kvar stages and 50 kvar with 2 x 25 kvar stages in an enclosure 800 mm wide and 400 mm deep

Typical type specification: C84C 100–50–2–400/440–84 and C84C 50-25-2-400/440–84
see page 80

- **2. Selecting the mounting rail sets:**

The mounting rail sets are selected to suit the existing or planned enclosure system (e.g. Rittal VX25).
One mounting rail set is required per module. An additional set is needed for the mounting plate (control terminal strips).

Typical type specification: Rittal VX25 W × D 800 x 400 mm
see page 91

- **3. Selecting the required accessories:**

e.g.:
— Connection bracket set (e.g. CU AW–1)
— Ventilation set (e.g. LP-LSFC-A IP43-7/1)
— Mounting plates for control terminal strips (e.g. SB–C8)
see page 89

- **4. Selecting the required control relay package:**

The control relay package is selected to suit the number of switchable stages required:
— up to 6 switchable stages: 6-stage control relay package (e.g. STR–PQC 06)
— Up to 12 switchable stages: 12-stage control relay package (e.g. STR–PQC 12)
see page 88

Ordering example 1

- **Description:**

Example: Assembly of a power factor correction system, without detuning, with the following specifications, in a sheet steel cabinet:
— **Total corrective power: 250 kvar, 400 V, 50 Hz**
Stage corrective power: 2 × 25 kvar and 4 × 50 kvar
— **6-stage reactive power control relay**
— **Rittal VX25 baying system**

Article-No.	Description	Quantity
34-64127	C84C 100-50-2-400/440-84	2
34-64218	C84C 50-25-2-400/440-84	1
34-80040	TSC Rittal VX25 W x D 800 x 400 mm	4
34-80006	Connection bracket set CU AW–1	1
34-80285	Ventilation set LP-LSFC-A IP43-7/1	1
34-80053	Mounting plates for control terminal strips, control transformer, etc. SB–C8	1
34-72108	STR-PQC 620-1300, control terminal strip with thermal trip contact, cable 1300 mm long	1

Ordering example 2

- **Description:**

Example: Assembly of a power factor correction system, without detuning, with the following specifications, in a sheet steel cabinet:
— **Total corrective power: 350 kvar, 400 V, 50 Hz**
Stage corrective power: 2 × 25 kvar and 6 × 50 kvar
— **12-stage reactive power control relay**
— **Rittal VX25 baying system**

Article-No.	Description	Quantity
34-64127	C84C 100-50-2-400/440-84	3
34-64218	C84C 50-25-2-400/440-84	1
34-80040	TSC Rittal VX25 W x D 800 x 400 mm	5
34-80006	Connection bracket set CU AW–1	1
34-80285	Ventilation set LP-LSFC-A IP43-7/1	1
34-80053	Mounting plates for control terminal strips, control transformer, etc. SB–C8	1
34-72109	STR-PQC 650-1300, control terminal strip with thermal trip contact, cable 1300 mm long	1

Subject to technical changes / © FRAKO GmbH / www.frako.com

تسلاکالا
021-9102 6126 | teslakala.com

Ordering examples

Example of mounting plates, detuned, for installation in enclosure systems supplied by others

Selection criteria:

- **1. Selecting the modules:**

The mounting plates are selected according to:
— Required corrective power (max.100 kvar)
— Required stage corrective power
— Required detuning factor

e.g. 93.75 kvar total corrective power with 6.25 kvar stages and 7 % detuning factor.

Typical type specification: LSP 93,75–6,25–1111–400/440–3–P7
see page 76

- **2. Selecting the required accessories:**

e.g.:
— Control cable set (with the required length)
(e.g. RKS-PQC 6-1300)
see page 88

- **3. Selecting the required reactive power control relay:**

The control relay is selected to suit the number of switchable stages and additional functions required:
— up to 6 switchable stages: 6-stage control relay
(e.g. PQC 0602401-0)
— up to 12 switchable stages: 12-stage control relay
(e.g. PQC 1202401-0)
see page 88

Ordering example

- **Description:**

Example: Installation of a detuned mounting plate, with the following specifications, in an existing sheet steel cabinet:
— **Total corrective power: 93.75 kvar, 400 V, 50 Hz**
Stage corrective power: 6.25 kvar, 7 % choke factor
— **6-stage reactive power control relay**
— **Control cable set 1300 mm long**

Article-No.	Description	Quantity
34-57728	LSP 93,75-6,25-1111-400/440-3-P7	1
92-11303	Control cable set: RKS-PQC 6-1300	1
38-00402	Control relay PQC 0602401-0	1

تسلاکالا
021-9102 6126 | teslakala.com

Ordering examples

Example of module packages using detuned modules for installation in enclosure systems supplied by others

Selection criteria:

- **1. Selecting the modules:**

The modules are selected according to:
— Required number and size of the stages, smallest required stage corrective power
— The planned enclosure system with its available dimensions

e.g. 100 kvar with 2 x 50 kvar stages and 50 kvar with 2 x 25 kvar stages in an 800 mm wide and 400 mm deep cabinet

Typical type specification: C84D 100–50–2–400/440–84-P7 and C84D 50-25-2-400/440–84-P7
see page 84

- **2. Selecting the mounting rail sets:**

The mounting rail sets are selected to suit the existing or planned enclosure system (e.g. Rittal VX25).
One mounting rail set is required per module. An additional set is needed for the mounting plates (control terminal strips).

Typical type specification: Rittal VX25 W × D 800 x 400 mm
see page 91

- **3. Selecting the required accessories:**

The required accessories, e.g.
— Connection bracket set (e.g. CU AW–1)
— Ventilation set (e.g. LP-LSFC-A IP43-7/1)
— Mounting plates for control terminal strips (e.g. SB–C8)
see page 89

- **4. Selecting the required control relay package:**

The control relay package is selected to suit the number of switchable stages required:
— up to 6 switchable stages: 6-stage control relay package (e.g. STR–PQC 06)
— up to 12 switchable stages: 12-stage control relay package (e.g. STR–PQC 12)
see page 88

Ordering example 1

- **Description:**

Example: Assembly of a detuned power factor correction system with the following specifications for a sheet steel cabinet:
— **Total corrective power: 250 kvar, 400 V, 50 Hz**
Stage corrective power: 2 × 25 kvar and 4 × 50 kvar
— **6-stage reactive power control relay**
— **Rittal VX25 baying system**

Article-No.	Description	Quantity
34-64014	C84D 100-50-2-400/440-84-P7	2
34-64009	C84D 50-25-2-400/440-84-P7	1
34-80040	TSC Rittal VX25 W x D 800 x 400 mm	4
34-80006	Connection bracket set CU AW–1	1
34-80285	Ventilation set LP-LSFC-A IP43-7/1	1
34-80053	Mounting plates for control terminal strips, control transformer, etc. SB–C8	1
34-72108	STR-PQC 620-1300, control terminal strip with thermal trip contact, cable 1300 mm long	1

Ordering example 2

- **Description:**

Example: Assembly of a detuned power factor correction system with the following specifications for a sheet steel cabinet:
— **Total corrective power: 350 kvar, 400 V, 50 Hz**
Stage corrective power: 2 × 25 kvar and 6 × 50 kvar
— **12-stage reactive power control relay**
— **Rittal VX25 baying system**

Article-No.	Description	Quantity
34-64014	C84D 100-50-2-400/440-84-P7	3
34-64009	C84D 50-25-2-400/440-84-P7	1
34-80040	TSC Rittal VX25 W x D 800 x 400 mm	5
34-80006	Connection bracket set CU AW–1	1
34-80285	Ventilation set LP-LSFC-A IP43-7/1	1
34-80053	Mounting plates for control terminal strips, control transformer, etc. SB–C8	1
34-72109	STR-PQC 650-1300, control terminal strip with thermal trip contact, cable 1300 mm long	1

Subject to technical changes / © FRAKO GmbH / www.frako.com

تسلاکالا
021-9102 6126 | teslakala.com

Accessory equipment for PFC Systems and modules

Ordering examples

Ordering examples

Example of module packages using detuned dynamic modules, for installation in enclosure systems supplied by others Capacitor-reactor modules, wear-free and fast-acting, with electronic switching for 100 % duty cycle

Selection criteria:

- **1. Selecting the dynamic modules:**

The modules are selected according to:
— Required number and size of the stages, smallest required stage corrective power
— The planned enclosure system with its available dimensions

e.g. 100 kvar with 2 x 50 kvar stages and 50 kvar with 2 x 25 kvar in an enclosure 800 mm wide and 400 mm deep

Typical type specifications: C85D 100–50–2–400/440–85-P7-E and C84D 50-25-2-400/440–84-P7-E
see page 161

- **2. Selecting the mounting rail sets:**

The mounting rail sets are selected to suit the existing or planned enclosure system (e.g. Rittal VX25).
One mounting rail set is required per module. An additional set is needed for the mounting plates (control terminal strips).

Typical type specification: Rittal VX25 W × D 800 x 500 mm
see page 91

- **3. Selecting the required accessories:**

e.g.:
— Connection bracket set (e.g. CU AW–1)
— Ventilation set (e.g. LP-LSFC-A IP43-7/1)
— Mounting plates for control terminal strips (e.g. SB–C8)
see page 89

- **4. Selecting the required control relay package:**

The control relay package is selected to suit the number of switchable stages required:
— up to 6 switchable stages: 6-stage control relay package (e.g. STR–PQC 06, or fast-acting STR-PFC 12TR-1-2400)
— up to 12 switchable stages: 12-stage control relay package (e.g. STR–PQC 12, or fast-acting STR-PFC 12TR-1-2400)
see page 88

Ordering example 1

- **Description:**

Example: Assembly of a detuned dynamic power factor correction system with the following specifications for a sheet steel cabinet

— Total corrective power: 250 kvar, 400 V, 50 Hz
Stage corrective power: 2 × 25 kvar and 4 × 50 kvar
— 6-stage reactive power control relay
— Rittal VX25 baying system

Article-No.	Description	Quantity
34-64032	C85D 100-50-2-400/440-85-P7-E	2
34-64029	C84D 50-25-2-400/440-84-P7-E	1
34-80041	TSC Rittal VX25 W x D 800 x 500 mm	4
34-80006	Connection bracket set CU AW–1	1
34-80285	Ventilation set LP-LSFC-A IP43-7/1	1
34-80053	Mounting plates for control terminal strips, control transformer, etc. SB–C8	1
34-72108	* STR-PQC 620-1300, control terminal strip with thermal trip contact, cable 1300 mm long	1
34-72214	** STR-PFC 12TR-1-2400, (with control terminal strip with thermal trip contact, cable 2.4 m long)	1
34-80056	*** SBS–PS 24 V DC-0.63 A power supply unit (24 V DC / 0.63 A output) for actuating the electronic switches	1

Ordering example 2

- **Description:**

Example: Assembly of a detuned dynamic power factor correction system with the following specifications for a sheet steel cabinet:

— Total corrective power: 300 kvar, 400 V, 50 Hz
Stage corrective power: 6 × 50 kvar
— 6-stage reactive power control relay
— Rittal VX25 baying system

Article-No.	Description	Quantity
34-64032	C85D 100-50-2-400/440-85-P7-E	3
34-80041	TSC Rittal VX25 W x D 800 x 500 mm	6
34-80006	Connection bracket set CU AW–1	1
34-80285	Ventilation set LP-LSFC-A IP43-7/1	1
34-80053	Mounting plates for control terminal strips, control transformer, etc. SB–C8	1
34-72108	* STR-PQC 620-1300, control terminal strip with thermal trip contact, cable 1300 mm long	1
34-72214	** STR-PFC 12TR-1-2400, (with control terminal strip with thermal trip contact, cable 2.4 m long)	1
34-80056	*** SBS–PS 24 V DC-0.63 A power supply unit (24 V DC / 0.63 A output) for actuating the electronic switches	1

* This option is just necessary if only wear-free switching is required.
** This option is necessary if it is not only wear-free switching that is required but also fast-acting switching with reaction times of 20 to 40 ms.
*** Necessary to supply DC power to actuate the modules

تسلاکالا
021-9102 6126 | teslakala.com

PFC Systems

Power Factor Correction Systems

Page 113

Power Factor Correction Systems – detuned

Page 127

MCS – Modular Construction System

Page 149

Subject to technical changes / © FRAKO GmbH / www.frako.com

تسلاکالا
021-9102 6126 | teslakala.com



Power Factor Correction Systems

Ready to connect, automatic Power Factor Correction Systems in sheet steel cabinets for wall mounting or floor installation.

- Power Range: 17.5 to 500 kvar per cabinet
- Ready for connection
- Fully automatic and intelligent Power Factor Control Relay
- Power Factor Correction Capacitors LKT dry type with four safety features

Application Recommendations

Power Factor Correction Systems are suitable for networks without harmonic distortion.

Attention: Even low harmonic levels can be amplified by network resonances. High harmonic levels can overload or damage all electrical devices and machines in the network.

Nowadays networks without harmonic distortion are quite rare. Therefore we generally recommend installing fixed capacitors with harmonic filter reactors.

تسلاکالا
021-9102 6126 | teslakala.com

	LSK	LSFC
		
Power range [kvar]	17.5 - 200	100 - 500
System design	Compact	Modular
Enclosure	Wall-mounting	Floor-standing
Enclosure material	Sheet steel	Sheet steel
Power Factor Control Relay	PQC	PQC
Connection option from below	•	•
Connection option from top (optional)	-	•
Extension unit	LSKZ	LSFCZ

Subject to technical changes / © FRAKO GmbH / www.frako.com

تسلاکالا
021-9102 6126 | teslakala.com



LSK
Power Factor Correction Systems

Ready to connect, automatic Power Factor Correction Systems in sheet steel cabinets for wall mounting. Suitable for networks without harmonic distortion.

- Power Range: 17.5 to 200 kvar per cabinet
- Compact design in sheet steel enclosures
- Ready for connection
- Fully automatic and intelligent Power Factor Control Relay
- Power Factor Correction Capacitors LKT dry type with four safety features

Application Recommendations

Power Factor Correction Systems type LSK are a perfect solution for small and medium-sized firms and buildings.

Power Factor Correction Systems type LSK are suitable for power factor correction in networks without harmonic distortion.

Attention: Even low harmonic levels can be amplified by network resonances. High harmonic levels can overload or damage all electrical devices and machines in the network.

Today, networks without harmonic distortion are quite rare. Therefore we generally recommend installing fixed capacitors with Harmonic Filter Reactors.

تسلاکالا
021-9102 6126 | teslakala.com

Power Range

Power Factor Correction System in sheet steel cabinet:

- **LSK ...-4:** 17.5 to 60 kvar
- **LSK ...-2:** 68.75 to 100 kvar
- **LSK ...-3:** 112.5 to 200 kvar

Construction

The ready-for-connection Power Factor Correction System consists of a pre-assembled mounting plate, type LSPN or LSP and suitable sheet steel enclosures.

The cabinet contains:

- Self-healing LKT type power capacitors with low-loss self-healing dielectric made from segmented metallised polypropylene film. Filled with a PCB-free filler. With discharge resistors, as per EN 60831-1 and -2 as well as IEC 60831-1 and -2
- Capacitor Switching Contactors with leading transition contact for damping of current peaks
- Fuse links, 3-pole, size NH00
- Control terminal strip with control fuse and thermal trip contact for safety shutdown
- Intelligent Power Factor Control of the PQC series

Installation Site

The place of installation must comply with the requirements of the ingress protection and ambient temperature concerned.

Regulations

For installation and connection of Power Factor Correction Capacitors in Germany the following regulations must be complied with: VDE 0100, VDE 0105, VDE 0560 Part 46 and VDE 0106 Part 100 (German Association of Electrical Engineers). In other countries the equivalent local regulations must be followed.

Connection

The power supply cable and the current transformer cable enter the bottom of the cabinet through a sliding cable gland and a cable clamp rail, the power supply being connected to the busbar system and the current transformer cable to the terminal strip provided.

System Expansion

An extension of the system is possible by adding LSKZ extension units. This extension unit will be integrated in the existing control circuit via the control cable (supplied with the extension unit).

Technical Data

Design	LSK Sheet steel wall cabinet LSK …-4 with door left hinged LSK …-2 /…-3 with door right hinged
Rated voltage	400 V/50 Hz
Rated voltage of capacitors	440 V/50 Hz
Ambient temperature	–5 °C to +35 °C
Humidity	Max. 90 %, no condensation
Cabinet colour	RAL 7035
Standards	EN 60831-1 and -2 IEC 60831-1 and -2 EN 61921 IEC 61921 EN 61439-1 and -2 IEC 61439-1 and 2 UKCA

Important Notes

The presence of inductive and capacitive reactances in the low voltage network means that the harmonics generated there, together with those fed in from the medium voltage network, can be amplified many times over due to resonance. Particularly in industrial networks with loads that generate harmonics, the use of conventional power factor correction systems without Harmonic Filter Reactors is not advisable. Instead, detuned systems should be installed. See the LSK-P series of Power Factor Correction Systems.

For further information on power factor correction and harmonics please refer to our “Manual of Power Quality”.

FRAKO systems are designed for connecting 5 core cables. If a 4-core cable is used, a jumper must be fitted to connect PE and N, or a control transformer must be installed.

Subject to technical changes / © FRAKO GmbH / www.frako.com

تسلاکالا
021-9102 6126 | teslakala.com

Article-No.	Type	Rated power [kvar]	Stage power [kvar]	Switching sequence	Dimensions Width [mm]	Height [mm]	Depth [mm]	Weight approx. [kg]	Protection IP
Power Factor Correction Systems in sheet steel wall cabinets, rated mains voltage: 400 V / 50 Hz Type series: LSK …-4									
34-14819	LSK 17,5-2,5-111-400-4-620-54	17.5	2.5	1:2:4	500	500	300	26	54
34-14820	LSK 27,5-2,5-112-400-4-620-54	27.5	2.5	1:2:4:4	500	500	300	29	54
34-14821	LSK 30-5-11A-400-4-620-54	30	5	1:2:3	500	500	300	29	54
34-14822	LSK 37,5-2,5-1111-400-4-620-54	37.5	2.5	1:2:4:8	500	500	300	31	54
34-14823	LSK 37,5-7,5-12-400-4-620-54	37.5	7.5	1:2:2	500	500	300	29	54
34-14824	LSK 43,75-6,25-111-400-4-620- 54	43.75	6.25	1:2:4	500	500	300	30	54
34-14836	LSK 46,88-3,13-1111-400-4-620-54	46.88	3.13	1:2:4:8	500	500	300	31	54
34-14837	LSK 50-5-11A1-400-4-620-54	50	5	1:2:3:4	500	500	300	32	54
34-14838	LSK 50-10-12-400-4-620-54	50	10	1:2:2	500	500	300	30	54
34-14839	LSK 52,5-7,5-111-400-4-620-54	52.5	7.5	1:2:4	500	500	300	31	54
34-14840	LSK 60-10-11A-400-4-620-54	60	10	1:2:3	500	500	300	33	54
Power Factor Correction Systems in sheet steel wall cabinets, rated mains voltage: 400 V / 50 Hz Type series: LSK …-2									
34-14841	LSK 68,75-6,25-112-400-2-620	68.75	6.25	1:2:4:4	600	811	286	43	20
34-14842	LSK 75-6,25-212-400-2-620	75	6.25	1:1:2:4:4	600	811	286	44	20
34-14843	LSK 75-12,5-11A-400-2-620	75	12.5	1:2:3	600	811	286	44	20
34-14844	LSK 87,5-12,5-111-400-2-620	87.5	12.5	1:2:4	600	811	286	45	20
34-14845	LSK 93,75-6,25-1111-400-2-620	93.75	6.25	1:2:4:8	600	811	286	46	20
34-14846	LSK 100-12,5-211-400-2-620	100	12.5	1:1:2:4	600	811	286	49	20
Power Factor Correction Systems, extension units in sheet steel wall cabinets, rated mains voltage: 400 V / 50 Hz Type series: LSKZ …-2									
34-14080	LSKZ 50-50-1-400-2	50	50	1	600	811	286	42	20
34-14078	LSKZ 75-25-11-400-2	75	25	1:2	600	811	286	51	20
34-14076	LSKZ 100-50-2-400-2	100	50	1:1	600	811	286	55	20
Power Factor Correction System in sheet steel wall cabinets, rated mains voltage: 400 V / 50 Hz Type series: LSK …-3									
34-14825	LSK 112,5-6,25-11AB-400-3-620	112.5	6.25	1:2:3:6:6	600	1211	311	88	20
34-14826	LSK 125-12,5-221-400-3-620	125	12.5	1:1:2:2:4	600	1211	311	88	20
34-14827	LSK 143,75-6,25-1112-400-3-620	143.75	6.25	1:2:4:8:8	600	1211	311	91	20
34-14847	LSK 150-12,5-212-400-3-620	150	12.5	1:1:2:4:4	600	1211	311	92	20
34-14828	LSK 150-25-22-400-3-620	150	25	1:1:2:2	600	1211	311	90	20
34-14848	LSK 175-25-13-400-3-620	175	25	1:2:2:2	600	1211	311	94	20
34-14849	LSK 187,5-12,5-113-400-3-620	187.5	12.5	1:2:4:4:4	600	1211	311	101	20
34-14850	LSK 200-12,5-213-400-3-620	200	12.5	1:1:2:4:4:4	500	1211	311	93	20
34-14851	LSK 200-25-23-400-3-620	200	25	1:1:2:2:2	600	1211	311	98	20
Power Factor Correction Systems, extension units in sheet steel wall cabinets, rated mains voltage: 400 V / 50 Hz Type series: LSKZ …-3									
34-14054	LSKZ 150-50-3-400-3	150	50	1:1:1	600	1211	311	91	20
34-14074	LSKZ 200-50-4-400-3	200	50	1:1:1:1	600	1211	311	97	20

تسلاکالا
021-9102 6126 | teslakala.com

Options and accessories for Power Factor Correction Systems type LSK 400V, 50 Hz

Options, mounted and wired ready for operation

Article-No.	Type	Description	LSK ...-4	LSK ...-3	LSK ...-2
S34-5540	-650- (instead of -620)	Power Factor Control Relay PQC-12/1 instead of PQC-6/1	•	•	•
S34-5508	-Li	Cabinet with door left hinged		•	•
S34-0060	-SO	Special painting outside (RAL-Scale)	•	•	•
S34-5032	-54	Ingress protection IP 54		•	
S34-5511	-S131	Fuse switch disconnector instead of fuse base per 50 kvar	•	•	•
S34-0103	-LSA	Switch disconnector* three-pole, 160 A in cable entry compartment		•	
S34-5538	-LSA	Switch disconnector* three-pole, 250 A in cable entry compartment, size of the cabinet changes for LSK…-3			•
S34-0105	-LSA	Switch disconnector* three-pole, 400 A in cable entry compartment		•	
S34-0039	-S56	Control switch (On/Off) fitted and connected (requirement for power factor correction systems installed in Switzerland)	•	•	•
S34-5535	-S19	Control phase + N via a protective motor switch (option for France)	•	•	•
S34-5537	-S119 (+ Power)	Control transformer set 315 VA incl. primary and secondary fuses	•	•	•
S34-0040	-S66	Summation current transformer 5+5/5A	•	•	•
S34-0081	-S66	Summation current transformer 5+5+5/5A	•	•	•

*) Switch disconnector can be operated from the outside

Accessories

Article-No.	Type	Description	LSK ...-4	LSK ...-3	LSK ...-2
34-80021	WB LSK-10	Wall distance assembly set 10 mm	•	•	•
34-80018	WB LSK-40	Wall distance assembly set 40 mm	•	•	•
34-80196	KR-LSK-2/LKND/ LKNS-200-RIT	Floor standing base (Height = 200 mm; Depth = 270 mm)			•
34-80194	KR-LSK-3-200	Floor standing base (Height = 200 mm; Depth = 300 mm)		•	

Subject to technical changes / © FRAKO GmbH / www.frako.com

تسلاکالا
021-9102 6126 | teslakala.com

Dimensions

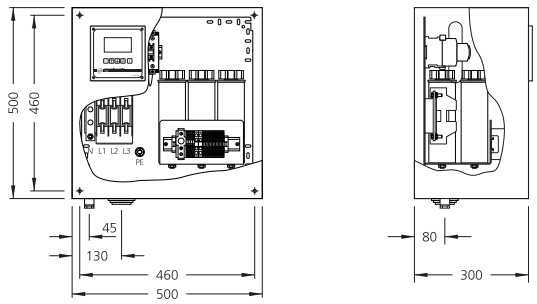

Dimensional drawing LSK-4 (17.5 to 60 kvar)

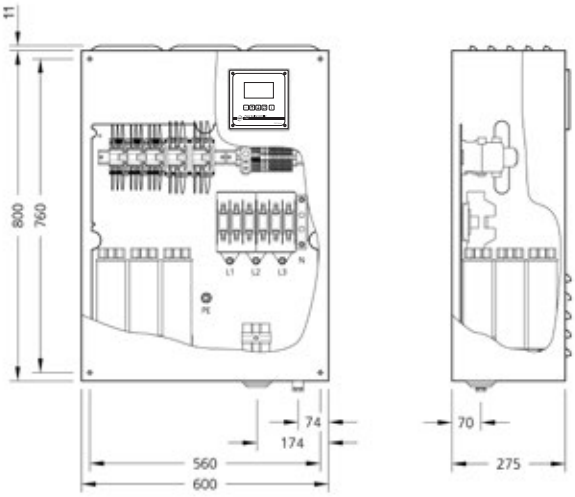

Dimensional drawing LSK-2 (68.75 to 100 kvar)

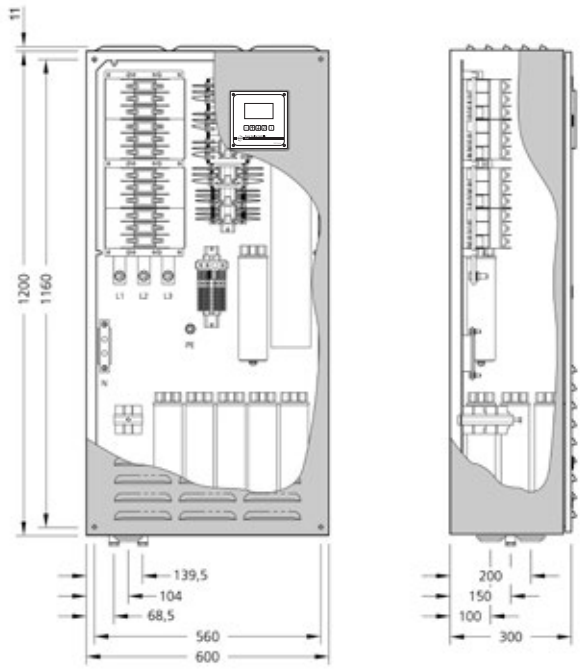

Dimensional drawing LSK-3 (112.5 to 200 kvar)

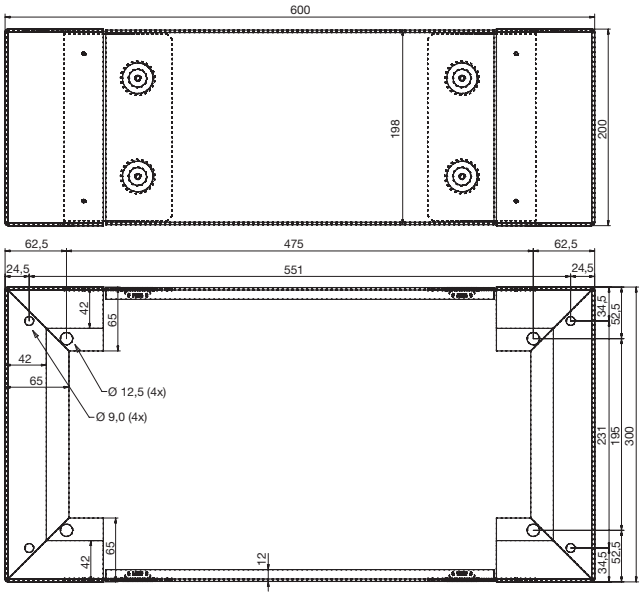

Dimensional drawing base LSK-3

All dimensions in mm

تسلاکالا
021-9102 6126 | teslakala.com

Subject to technical changes / © FRAKO GmbH / www.frako.com

تسلاکالا
021-9102 6126 | teslakala.com



LSFC
Power Factor Correction Systems

Ready to connect, automatic Power Factor Correction Systems in sheet steel cabinets for floor installation. Suitable for networks without harmonic distortion.

- Power Range: 100 to 500 kvar
- Modular construction in freestanding sheet steel cabinet
- Ready for connection
- Fully automatic and intelligent Power Factor Control Relay
- Power Factor Correction Capacitors LKT dry-type with four safety features

Application Recommendations

Power Factor Correction Systems, type LSFC are suitable for compensation in networks without harmonic distortion.

Attention: Even low harmonic levels can be amplified by network resonances. For Power Factor Correction Systems with a power >150 kvar this effect will amplify even more. This is because the PFC-System, together with the transformer, generates resonance frequencies in the network, which are within the range of the low frequency, energy-intensive harmonics. High harmonic levels can overload or damage all electrical devices and machines in the network.

Today, networks without harmonic distortion are quite rare. Therefore we generally recommend installing fixed capacitors with Harmonic Filter Reactors.

تسلاکالا
021-9102 6126 | teslakala.com

Power Range
Power Factor Correction System in sheet steel cabinet:
- 100 to 500 kvar

Construction
The ready-for-connection Power Factor Correction System consists of pre-assembled capacitor-reactor modules type C64C… and the suitable sheet steel cabinet.

The cabinet contains:
- Self-healing LKT type power capacitors with low loss self-healing dielectric made from segmented metallised polypropylene film. Filled with a PCB-free filler. With discharge resistors, as per EN 60831-1 and -2 as well as IEC 60831-1 and -2
- Capacitor Switching Contactors with leading transition contact for damping of current peaks
- Fuse links, 3-pole, size NH00
- Control terminal strip with control fuse and thermal trip contact for safety shutdown
- Intelligent Power Factor Control Relay of the PQC series

Application / Installation
The place of installation must comply with the requirements of the ingress protection and ambient temperature concerned.

Regulations
For installation and connection of Power Factor Correction Capacitors in Germany the following regulations must be complied with: VDE 0100, VDE 0105, VDE 0560 Part 46 and VDE 0106 Part 100 (German Association of Electrical Engineers). In other countries the equivalent local regulations must be followed.

Connection
The power supply cable and the current transformer cable enter the bottom of the cabinet through a sliding gland plate and a cable clamp rail, the power supply being connected to the busbar system and the current transformer cable to the terminal strip provided.

System Expansion
An extension of the system is possible by adding LSFCZ extension units. This extension unit will be integrated in the existing control circuit via the control cable (supplied with the extension unit).

Technical Data

Design	Sheet steel cabinet with door right hinged
Rated voltage	400 V/50 Hz
Rated voltage of capacitors	440 V/50 Hz
Ambient temperature	–5 °C to +40 °C
Humidity	Max. 90 %, no condensation
Cabinet colour	RAL 7035
Standards	EN 60831-1 and -2 IEC 60831-1 and -2 EN 61921 IEC 61921 EN 61439-1 and -2 IEC 61439-1 and 2 UKCA

Important Notes
The presence of inductive and capacitive reactances in the low voltage network means that the harmonics generated there, together with those fed in from the medium voltage network, can be amplified many times over due to resonance. Particularly in industrial networks with loads that generate harmonics, the use of conventional power factor correction systems without Harmonic Filter Reactors is not advisable. Instead, detuned systems should be installed. See the LSFC-P series of Power Factor Correction Systems.

For further information on power factor correction and harmonics please refer to our “Manual of Power Quality”.

FRAKO systems are designed for connecting 5 core cables. If a 4-core cable is used, a jumper must be fitted to connect PE and N, or a control transformer must be installed.

Subject to technical changes / © FRAKO GmbH / www.frako.com

تسلاکالا
021-9102 6126 | teslakala.com

Article-No.	Type	Rated power [kvar]	Stage power [kvar]	Switching sequence	Dimensions Width [mm]	Dimensions Height [mm]	Dimensions Depth [mm]	Weight approx. [kg]	Protection IP
Power Factor Correction Systems in sheet steel cabinets (width = 600 mm), rated mains voltage: 400 V / 50 Hz Type series: LSFC									
34-22773	LSFC 100-12,5-211-400-64-620	100	12.5	1:1:2:4	600	2000	400	120.5	30
34-22774	LSFC 100-25-21-400-64-620	100	25	1:1:2	600	2000	400	116	30
34-22775	LSFC 125-12,5-221-400-64-620	125	12.5	1:1:2:2:4	600	2000	400	136	30
34-22776	LSFC 125-25-12-400-64-620	125	25	1:2:2	600	2000	400	132	30
34-22777	LSFC 150-12,5-212-400-64-620	150	12.5	1:1:2:4:4	600	2000	400	137	30
34-22778	LSFC 150-25-22-400-64-620	150	25	1:1:2:2	600	2000	400	135	30
34-22779	LSFC 150-25-6-400-64-620	150	25	1:1:1:1:1:1	600	2000	400	136	30
34-22780	LSFC 175-12,5-11A2-400-64-620	175	12.5	1:2:3:4:4	600	2000	400	139	30
34-22781	LSFC 175-25-13-400-64-620	175	25	1:2:2:2	600	2000	400	138	30
34-22782	LSFC 200-12,5-213-400-64-620	200	12.5	1:1:2:4:4:4	600	2000	400	141	30
34-22783	LSFC 200-25-23-400-64-620	200	25	1:1:2:2:2	600	2000	400	143	30
34-22785	LSFC 225-12,5-223-400-64-650	225	12.5	1:1:2:2:4:4:4	600	2000	400	156	30
34-22786	LSFC 225-25-14-400-64-620	225	25	1:2:2:2:2	600	2000	400	152	30
34-22787	LSFC 225-25-9-400-64-650	225	25	1:1:2:4:4:4:4	600	2000	400	154	30
34-22788	LSFC 250-12,5-214-400-64-650	250	12.5	1:1:2:4:4:4:4	600	2000	400	158	30
34-22789	LSFC 250-25-24-400-64-620	250	25	1:1:2:2:2:2	600	2000	400	157	30
34-22790	LSFC 250-25-0-400-64-650	250	25	1:1:1:1:1:1:1:1:1:1	600	2000	400	159	30
34-22791	LSFC 250-50-5-400-64-620	250	50	1:1:1:1:1	600	2100	400	156	30
34-22792	LSFC 275-25-15-400-64-620	275	25	1:2:2:2:2:2	600	2000	400	166	30
34-22793	LSFC 300-12,5-215-400-64-650	300	12.5	1:1:2:4:4:4:4:4	600	2000	400	166	30
34-22794	LSFC 300-25-25-400-64-650	300	25	1:1:2:2:2:2:2	600	2000	400	163	30
34-22795	LSFC 300-25-0-400-64-650	300	25	1:1:1:1:1:1:1:1:1:1:1	600	2000	400	236	30
34-22796	LSFC 300-50-6-400-64-620	300	50	1:1:1:1:1:1	600	2000	400	164	30
34-22797	LSFC 325-25-16-400-64-650	325	25	1:2:2:2:2:2:2	600	2000	400	174	20
34-22798	LSFC 350-25-26-400-64-650	350	25	1:1:2:2:2:2:2:2	600	2000	400	183	20
34-22799	LSFC 350-50-7-400-64-650	350	50	1:1:1:1:1:1:1	600	2000	400	181	20
34-22800	LSFC 375-25-17-400-64-650	375	25	1:2:2:2:2:2:2:2	600	2000	400	190	20
34-22801	LSFC 400-25-27-400-64-650	400	25	1:1:2:2:2:2:2:2:2	600	2000	400	188	20
34-22802	LSFC 400-50-8-400-64-650	400	50	1:1:1:1:1:1:1:1	600	2000	400	173	20
Power Factor Correction Systems, extension units in sheet steel cabinets (width = 600 mm), rated mains voltage: 400 V / 50 Hz Type series: LSFCZ									
34-16235	LSFCZ 100-50-2-400-64	100	50	1:1	600	2000	400	137	30
34-16236	LSFCZ 150-50-3-400-64	150	50	1:1:1	600	2000	400	125	30
34-16237	LSFCZ 200-50-4-400-64	200	50	1:1:1:1	600	2000	400	142	30
34-16238	LSFCZ 250-50-5-400-64	250	50	1:1:1:1:1	600	2000	400	157	30
34-16239	LSFCZ 300-50-6-400-64	300	50	1:1:1:1:1:1	600	2000	400	180	30
34-16240	LSFCZ 350-50-7-400-64	350	50	1:1:1:1:1:1:1	600	2000	400	183	20
34-16241	LSFCZ 400-50-8-400-64	400	50	1:1:1:1:1:1:1:1	600	2000	400	185	20

Other rated voltages, frequencies and power ratings on request.
Recommended supply lead cross sections: please refer to the technical annex.
Systems > 300 kvar with internal roof vent

تسلاکالا
021-9102 6126 | teslakala.com

Options and accessories for Power Factor Correction Systems type LSFC 400 V, 50 Hz

Options, mounted and wired ready for operation

Article-No.	Type	Description	for System type
S34-5540	-650- (instead of -620)	Power Factor Control Relay PQC-12/1 instead of PQC-6/1	all
S34-5519	-66- (instead of -64-)	FRAKO LSFC-66 WxHxD: 600x2000x600 mm (without floor standing base and roof)	LSFC-64
S34-5528	-66- (instead of -84-)	FRAKO LSFC-66 WxHxD: 600x2000x600 mm (without floor standing base and roof)	LSFC-84
S34-5503	-84- (instead of -64-)	FRAKO LSFC-84 WxHxD: 800x2000x400 mm (without floor standing base and roof)	LSFC-64
S34-5524	-85- (instead of -84-)	FRAKO LSFC-85 WxHxD: 800x2000x500 mm (without floor standing base and roof)	LSFC-84
S34-5517	-86- (instead of -84/85-)	FRAKO LSFC-86 WxHxD: 800x2000x600 mm (without floor standing base and roof)	LSFC-84/-85
S34-5554	-119- (instead of -64-)	Rittal VX 8604, WxHxD: 600x2000x400 mm (without floor standing base and roof)	LSFC-64
S34-5555	-118- (instead of -84/85-)	Rittal VX 8606 WxHxD: 600x2000x600 mm (without floor standing base and roof)	LSFC-84/-85
S34-5556	-117- (instead of -84-)	Rittal VX 8804, WxHxD: 800x2000x400 mm (without floor standing base and roof)	LSFC-84
S34-5557	-116- (instead of -85-)	Rittal VX 8805, WxHxD: 800x2000x500 mm (without floor standing base and roof)	LSFC-85
S34-5558	-115- (instead of -84-)	Rittal VX 8806, WxHxD: 800x2000x600 mm (without floor standing base and roof)	LSFC-84
S34-5559	-115- (instead of -85-)	Rittal VX 8806, WxHxD: 800x2000x600 mm (without floor standing base and roof)	LSFC-85
S34-5509	-Li	Cabinet door with door left hinged	
S34-5023	-S60	Pivoting lever closure for mounting a semiprofile cylinder	all
S34-0060	-SO (+ Description)	Special painting outside (RAL-Scale)	all
S34-0010	-S1	Cable entry through the cabinet roof with connection on top	up to 400 kvar/cabinet
S34-5512	-54	Ingress protection IP54	≤ 300 kvar/cabinet
S34-5513	-54	Ingress protection IP54	> 300 ≤ 400 kvar/cabinet
S34-0054	-S80	Ingress protection IPX1 with dust cover roof W x H x D: 520 x 300 x 50 mm; RAL 7035	all FRAKO LSFC
S34-5523	-S572	Ingress protection IP41, roof vent installation on cabinet instead of a roof vent installation in cabinet	≤ 400 kvar/cabinet
S34-5511	-S131	Fuse switch disconnector instead of fuse base per 50 kvar	all
S34-5514	-SLTA	Fuse switch disconnector in cable entry compartment	≤ 200 kvar/cabinet
S34-5515	-SLTA	Fuse switch disconnector in cable entry compartment	≤ 300 kvar/cabinet
S34-0108	-LSA	Switch disconnector* three-pole, 400 A in cable entry compartment	≤ 200 kvar/cabinet
S34-0106	-LSA	Switch disconnector* three-pole, 630 A in cable entry compartment	≤ 300 kvar/cabinet
S34-0039	-S56	Control switch (On/Off) fitted and connected (requirement for power factor correction systems installed in Switzerland)	all
S34-5535	-S19	Control phase + N via a protective motor switch (option for France)	all
S34-5536	-S119	Control transformer set 500 VA incl. primary and secondary fuses	≤ 500 kvar
S34-5526	-S119	Control transformer set 800 VA incl. primary and secondary fuses	> 500 ≤ 900 kvar
S34-0040	-S66	Summation current transformer 5+5/5A	all
S34-0081	-S66	Summation current transformer 5+5+5/5A	all
S34-5049	-S145	Switch cabinet lighting with power outlet and position switch	all

*) Switch disconnector can be operated from the outside

Subject to technical changes / © FRAKO GmbH / www.frako.com

تسلاکالا
021-9102 6126 | teslakala.com

Accessories

Article-No.	Type	Description	Dimensions (W x D) in mm	for System type
34-80439	KR-VX-LSFC-64	Floor standing base (h = 100 mm), loose	600 x 400	LSFC/VX-64
34-80440	KR-VX-LSFC-64	Floor standing base (h = 200 mm), loose	600 x 400	LSFC/VX-64
34-80441	KR-VX-LSFC-66	Floor standing base (h = 100 mm), loose	600 x 600	LSFC/VX-66
34-80442	KR-VX-LSFC-66	Floor standing base (h = 200 mm), loose	600 x 600	LSFC/VX-66
34-80443	KR-VX-LSFC-84	Floor standing base (h = 100 mm), loose	800 x 400	LSFC/VX-84
34-80444	KR-VX-LSFC-84	Floor standing base (h = 200 mm), loose	800 x 400	LSFC/VX-84
34-80445	KR-VX-LSFC-85	Floor standing base (h = 100 mm), loose	800 x 500	LSFC/VX-85
34-80309	KR-VX-LSFC-85	Floor standing base (h = 200 mm), loose	800 x 500	LSFC/VX-85
34-80446	KR-VX-LSFC-86	Floor standing base (h = 100 mm), loose	800 x 600	LSFC/VX-86
34-80310	Rittal VX25/TS8-86	Floor standing base (h = 200 mm), loose	800 x 600	LSFC/VX-86

Other options and accessories on request.

Dimensions

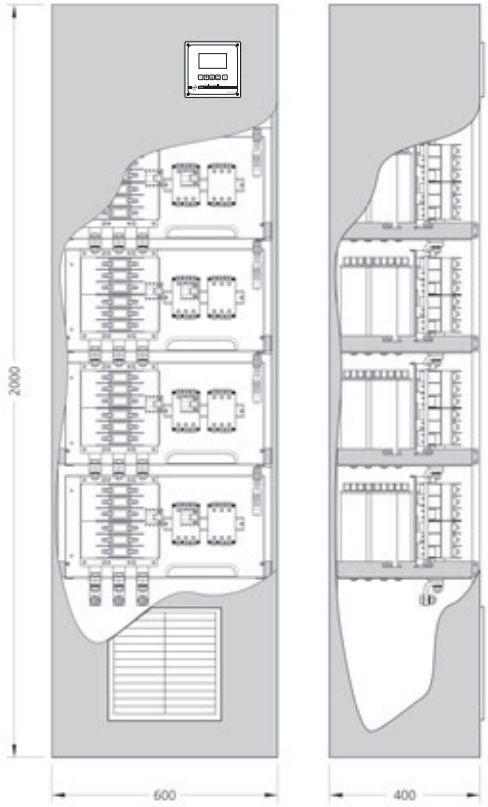

Dimensional drawing LSFC (100 bis 400 kvar)

All dimensions in mm

تسلاکالا
021-9102 6126 | teslakala.com

Base/plinth system VX

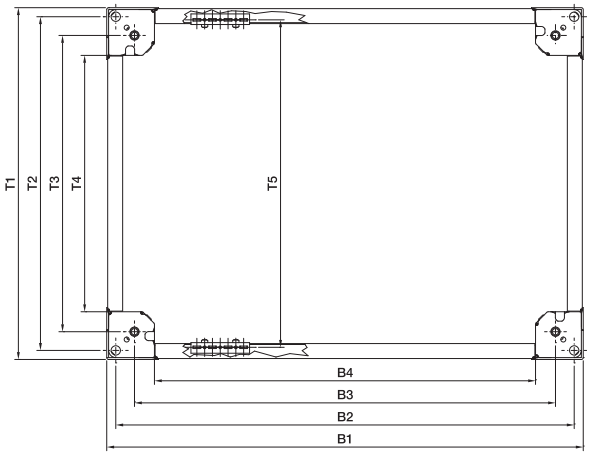

Dimensional drawing base/plinth 100 mm high

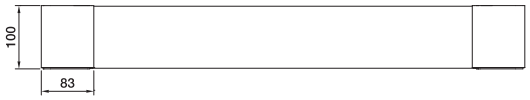

Dimensional drawing base/plinth 200 mm high

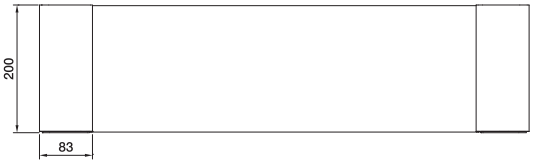

Description of the hole pattern

B1/T1 = outer dimensions
B2/T2 = for screwing with the corner piece of the cabinet (from below)
B3/T3 = for screwing to the cabinet bottom with a captive nut (from below or above)

For fixing to the floor, drill holes B2-B4/T2-T3 can be used.

Base/plinth trim panels, solid, 100 mm high, front view

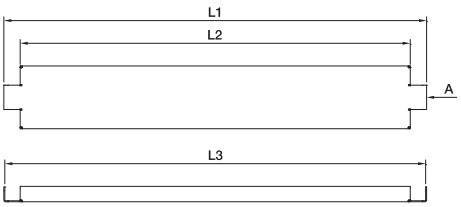

Base/plinth trim panels, solid, 200 mm high, front view

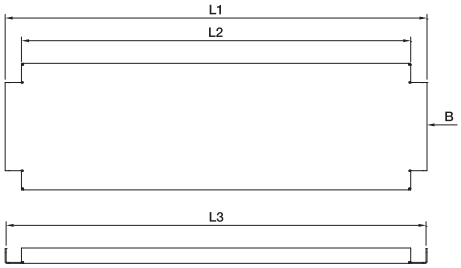

For enclosure width or depth mm	Width dimensions mm				Length dimensions mm			Depth dimensions mm				
	B1	B2	B3	B4	L1	L2	L3	T1	T2	T3	T4	T5[1)]
400	366	335	275	211	260	209	257	364	335	275	211	325
500	466	435	375	311	360	309	357	464	435	375	311	425
600	566	535	475	411	460	409	457	564	535	475	411	525
800	766	735	675	611	660	609	657	764	735	675	611	725

[1)] T5 = Distance between system punchings including base/plinth installation bracket

All dimensions in mm

Subject to technical changes / © FRAKO GmbH / www.frako.com

تسلاکالا
021-9102 6126 | teslakala.com



Power Factor Correction Systems – detuned

Ready to connect, automatic Power Factor Correction Systems in sheet steel cabinets for wall mounting or floor installation. Detuned – for low-voltage networks with harmonic content.

	LSK-P	LSFC-P
		
Sheet steel cabinet for wall-mounting	•	-
Sheet steel cabinet for floor installation	-	•
System design	Compact	Modular
Power range up to [kvar]	100	500
With Power Factor Control Relay	•	•
Connection option from below	•	•
Connection option from top (optional)	-	•
Version (P...)	P7 / P8 / P1	P7 / P8 / P1
Extension unit	LSKZ-P	LSFCZ-P...

تسلاکالا
021-9102 6126 | teslakala.com

Subject to technical changes / © FRAKO GmbH / www.frako.com

تسلاکالا
021-9102 6126 | teslakala.com



LSK-P
Power Factor Correction Systems – detuned

Ready to connect, automatic Power Factor Correction Systems in sheet steel cabinets for wall mounting. Detuned – for low-voltage networks with harmonic content.

- Power Range: 17.5 to 100 kvar
- Compact design in sheet steel cabinet for wall-mounting
- Ready for connection
- Fully automatic and intelligent Power Factor Control Relay
- Power Factor Correction Capacitors LKT dry-type with four safety features

Application Recommendations

Power Factor Correction Systems type LSK-P are a perfect solution for small and medium-sized firms and buildings and also for power factor correction at sub-distribution boards.

They are suitable for supply networks with harmonic distortion according to EN 61000-2-4 class 2. They are available as follows:

Version	Detuning factor	Resonance frequency
P1	p = 14 %	134 Hz
P7	p = 7 %	189 Hz
P8	p = 8 %	177 Hz

تسلاکالا
021-9102 6126 | teslakala.com

Power Factor Correction Systems

Power Factor Correction Systems – detuned

Power Range

Power Factor Correction System in sheet steel cabinet:

- 17.5 to 100 kvar

Construction

The ready-for-connection Power Factor Correction System consists of a pre-assembled mounting plate, type LSP-P and the suitable sheet steel cabinet.

The LSK-P contains:

- Self-healing LKT type power capacitors with low-loss self-healing dielectric made from segmented metallised polypropylene film. Filled with a PCB-free filler. With discharge resistors, as per EN 60831-1 and -2 as well as IEC 60831-1 and -2
- Heavy duty Capacitor Switching Contactors
- Harmonic Filter Reactors with overtemperature switch
- Fuse links, 3-pole, size NH00
- Control terminal strip with control fuse and thermal trip contact for safety shutdown
- Intelligent Power Factor Control Relay of the PQC series

Installation Site

The place of installation must comply with the requirements of the ingress protection and ambient temperature concerned.

Regulations

For installation and connection of Power Factor Correction Capacitors in Germany the following regulations must be complied with: VDE 0100, VDE 0105, VDE 0560 Part 46 and VDE 0106 Part 100 (German Association of Electrical Engineers). In other countries the equivalent local regulations must be followed.

Connection

The power cable and the CT cable enter the bottom of the cabinet through cable glands or rubber sleeves. The power cable is connected directly to the NH fuse base, the cable from the current transformer to the terminal strip.

System Expansion

An extension of the system is possible by adding LSKZ-P extension units. This extension unit will be integrated in the existing control circuit via the control cable (supplied with the extension unit).

Technical Data

Design	Sheet steel wall cabinet with door right hinged
Rated voltage	400 V/50 Hz
Rated voltage of capacitors	440 V/50 Hz
Ambient temperature	–5 °C to +35 °C
Humidity	Max. 90 %, no condensation
Cabinet colour	RAL 7035
Standards	EN 60831-1 and -2 IEC 60831-1 and -2 EN 61921 IEC 61921 EN 61439-1 and -2 IEC 61439-1 and 2 UKCA

Important Notes

For further information on power factor correction and harmonics please refer to our “Manual of Power Quality”.

FRAKO systems are designed for connecting 5 core cables. If a 4-core cable is used, a jumper must be fitted to connect PE and N, or a control transformer must be installed.

Subject to technical changes / © FRAKO GmbH / www.frako.com

تسلاکالا
021-9102 6126 | teslakala.com

Version: P1 (Detuning factor p = 14 %)

Article-No.	Type	Rated power [kvar]	Stage power [kvar]	Switching sequence	Dimensions Width [mm]	Dimensions Height [mm]	Dimensions Depth [mm]	Weight approx. [kg]	Protection IP
Power Factor Correction Systems in sheet steel wall cabinets, rated mains voltage: 400 V / 50 Hz Type series: LSK …-3-P1									
34-14566	LSK 21,88-3,13-111-400-3-620-P1	21.88	3.13	1:2:4	600	1211	311	97	20
34-14567	LSK 25-6,25-21-400-3-620-P1	25	6.25	1:1:2	600	1211	311	102	20
34-14568	LSK 31,25-6,25-12-400-3-620-P1	31.25	6.25	1:2:2	600	1211	311	105	20
34-14569	LSK 34,38-3,13-112-400-3-620-P1	34.38	3.13	1:2:4:4	600	1211	311	109	20
34-14570	LSK 43,75-6,25-111-400-3-620-P1	43.75	6.25	1:2:4	600	1211	311	119	20
34-14571	LSK 46,88-3,13-1111-400-3-620-P1	46.88	3.13	1:2:4:8	600	1211	311	125	20
34-14572	LSK 50-6,25-211-400-3-620-P1	50	6.25	1:1:2:4	600	1211	311	130	20
34-14573	LSK 50-12,5-21-400-3-620-P1	50	12.5	1:1:2	600	1211	311	125	20
34-14575	LSK 62,5-12,5-12-400-3-620-P1	62.5	12.5	1:2:2	600	1211	311	138	20
34-14576	LSK 68,75-6,25-112-400-3-620-P1	68.75	6.25	1:2:4:4	600	1211	311	150	20
34-14577	LSK 75-12,5-11A-400-3-620-P1	75	12.5	1:2:3	600	1211	311	157	20
34-14579	LSK 75-25-11-400-3-620-P1	75	25	1:2	600	1211	311	151	20
34-14580	LSK 87,5-12,5-111-400-3-620-P1	87.5	12.5	1:2:4	600	1211	311	159	20
34-14581	LSK 100-16,67-11A-400-3-620-P1	100	16.67	1:2:3	600	1211	311	170	20
Power Factor Correction Systems, extension units in sheet steel wall cabinets, rated mains voltage: 400 V / 50 Hz Type series: LSKZ …-3-P1									
34-14121	LSKZ 50-50-1-400-3-P1	50	50	1	600	1211	311	119	20
34-14131	LSKZ 75-25-11-400-3-P1	75	25	1:2	600	1211	311	150	20

Other rated voltages, frequencies and power ratings on request.

Recommended supply lead cross sections: please refer to the technical annex.

تسلاکالا
021-9102 6126 | teslakala.com

Version: P7 (Detuning factor p = 7 %)

Article-No.	Type	Rated power [kvar]	Stage power [kvar]	Switching sequence	Dimensions Width [mm]	Height [mm]	Depth [mm]	Weight approx. [kg]	Protection IP
Power Factor Correction Systems in sheet steel wall cabinets, rated mains voltage: 400 V / 50 Hz Type series: LSK …-3-P7									
34-14582	LSK 17,5-2,5-111-400-3-620-P7	17.5	2.5	1:2:4	600	1211	311	85	20
34-14583	LSK 25-5-12-400-3-620-P7	25	5	1:2:2	600	1211	311	91	20
34-14584	LSK 25-6,25-21-400-3-620-P7	25	6.25	1:1:2	600	1211	311	87	20
34-14585	LSK 30-5-11A-400-3-620-P7	30	5	1:2:3	600	1211	311	94	20
34-14586	LSK 31,25-6,25-12-400-3-620-P7	31.25	6.25	1:2:2	600	1211	311	92	20
34-14587	LSK 43,75-6,25-111-400-3-620-P7	43.75	6.25	1:2:4	600	1211	311	97	20
34-14588	LSK 46,88-3,13-1111-400-3-620-P7	46.88	3.13	1:2:4:8	600	1211	311	102	20
34-14589	LSK 50-6,25-211-400-3-620-P7	50	6.25	1:1:2:4	600	1211	311	104	20
34-14590	LSK 50-12,5-21-400-3-620-P7	50	12.5	1:1:2	600	1211	311	100	20
34-14592	LSK 52,5-7,5-111-400-3-620-P7	52.5	7.5	1:2:4	600	1211	311	107	20
34-14593	LSK 60-10-11A-400-3-620-P7	60	10	1:2:3	600	1211	311	111	20
34-14594	LSK 62,5-12,5-12-400-3-620-P7	62.5	12.5	1:2:2	600	1211	311	107	20
34-14595	LSK 68,75-6,25-112-400-3-620-P7	68.75	6.25	1:2:4:4	600	1211	311	117	20
34-14596	LSK 75-12,5-11A-400-3-620-P7	75	12.5	1:2:3	600	1211	311	117	20
34-14598	LSK 75-25-11-400-3-620-P7	75	25	1:2	600	1211	311	112	20
34-14599	LSK 87,5-12,5-111-400-3-620-P7	87.5	12.5	1:2:4	600	1211	311	122	20
34-14600	LSK 93,75-6,25-1111-400-3-620-P7	93.75	6.25	1:2:4:8	600	1211	311	131	20
34-14601	LSK 100-12,5-211-400-3-620-P7	100	12.5	1:1:2:4	600	1211	311	134	20
34-14603	LSK 100-25-21-400-3-620-P7	100	25	1:1:2	600	1211	311	129	20
Power Factor Correction Systems, extension units in sheet steel wall cabinets, rated mains voltage: 400 V / 50 Hz Type series: LSKZ …-3-P7									
34-14127	LSKZ 50-50-1-400-3-P7	50	50	1	600	1211	311	100	20
34-14120	LSKZ 75-25-11-400-3-P7	75	25	1:2	600	1211	311	113	20
34-14130	LSKZ 100-50-2-400-3-P7	100	50	1:1	600	1211	311	120	20

Versions with an 8 % choke factor are available with the same corrective power and configuration of the capacitance stages.
Other rated voltages, frequencies and power ratings on request.
Recommended supply lead cross sections: please refer to the technical annex.

Subject to technical changes / © FRAKO GmbH / www.frako.com

تسلاکالا
021-9102 6126 | teslakala.com

Options and accessories for Power Factor Correction Systems type LSK-P 400V, 50 Hz

Article-No.	Type	Description
Options, mounted and wired ready for operation		
S34-5540	-650- (instead of -620)	Power Factor Control Relay PQC-12/1 instead of PQC-6/1
S34-5508	-Li	Cabinet door with door left hinged
S34-0060	-SO	Special painting outside (RAL-Scale)
S34-5032	-54	Ingress protection IP54
S34-5511	-S131	With connection at the top instead of fuse base ≤ 60 kvar = 1 pc. > 60 kvar = 2 pcs
S34-0103	-LSA	Switch disconnector* three-pole, 160 A in cable entry compartment ≤ 60 kvar
S34-0104	-LSA	Switch disconnector* three-pole, 250 A in cable entry compartment > 60 kvar
S34-0039	-S56	Control switch (On/Off) fitted and connected (requirement for power factor correction systems installed in Switzerland)
S34-5535	-S19	Control phase + N via a protective motor switch (option for France)
S34-5537	-S119 (+ Power)	Control transformer set 315 VA incl. primary and secondary fuses
S34-0040	-S66	Summation current transformer 5+5/5A
S34-0081	-S66	Summation current transformer 5+5+5/5A
Accessories, loose		
34-80021	WB LSK-10	Wall distance assembly set 10 mm
34-80018	WB LSK-40	Wall distance assembly set 40 mm
34-80194	KR-LSK-3-200	Fixed base (Height = 200 mm; Depth = 300 mm)

*) Switch disconnector can be operated from the outside
Other options and accessories on request

Dimensions

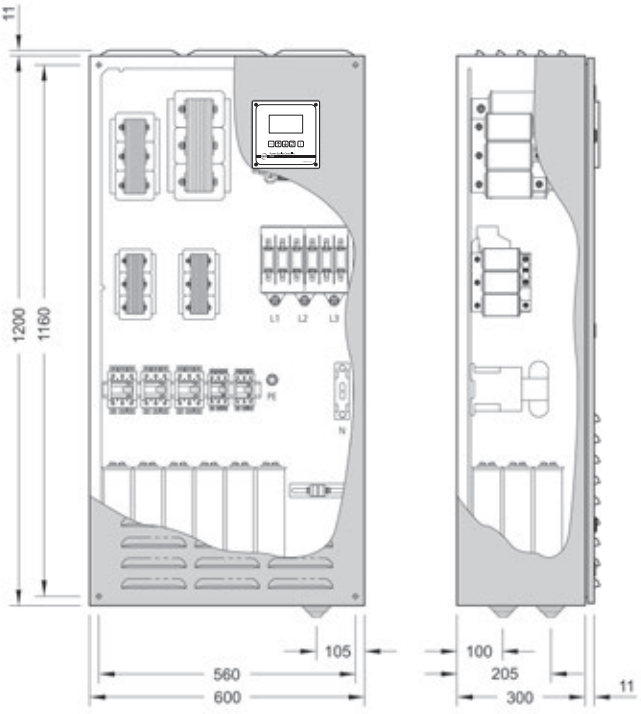

Dimensional drawing LSK-P (17.5 bis 100 kvar)

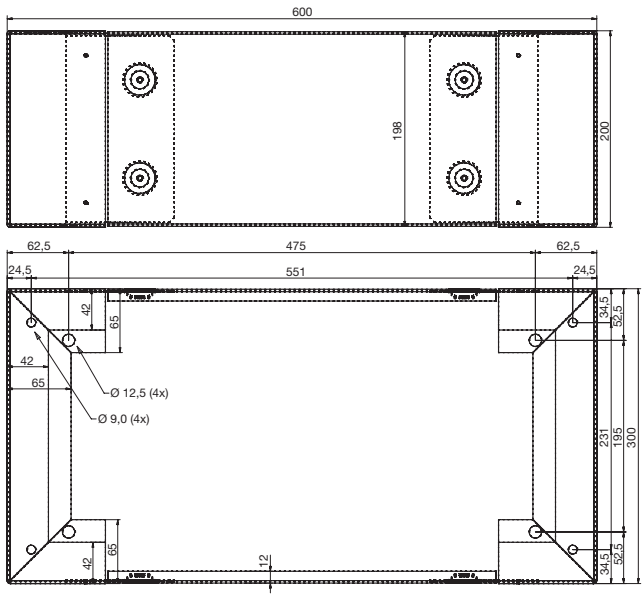

Dimensional drawing base LSK-3

All dimensions in mm

تسلاکالا
021-9102 6126 | teslakala.com

Subject to technical changes / © FRAKO GmbH / www.frako.com

تسلاکالا
021-9102 6126 | teslakala.com



NEW

LSKS-P
Power Factor Correction Systems – detuned

Ready to connect, automatic Power Factor Correction Systems in sheet steel cabinets for wall mounting. Detuned – for low-voltage networks with harmonic content.

- Power Range: 17.5 to 50 kvar
- Compact design in sheet steel cabinet for wall-mounting
- Ready for connection
- Fully automatic and intelligent Power Factor Control Relay
- Power Factor Correction Capacitors LKT dry-type with four safety features

Application Recommendations

Power Factor Correction Systems type LSKS-P are a perfect solution for small and medium-sized firms and buildings and also for power factor correction at sub-distribution boards.

They are suitable for supply networks with harmonic distortion according to EN 61000-2-4 class 2. They are available as follows:

Version	Detuning factor	Resonance frequency
P1	p = 14 %	134 Hz
P7	p = 7 %	189 Hz
P8	p = 8 %	177 Hz

تسلاکالا
021-9102 6126 | teslakala.com

Power Factor Correction Systems

Power Factor Correction Systems – detuned

Power Range

Power Factor Correction System in sheet steel cabinet:

- 17.5 to 50 kvar

Construction

The ready-for-connection Power Factor Correction System consists of a pre-assembled mounting plate, type LSP-P and the suitable sheet steel cabinet.

The LSK-P contains:

- Self-healing LKT type power capacitors with low-loss self-healing dielectric made from segmented metallised polypropylene film. Filled with a PCB-free filler. With discharge resistors, as per EN 60831-1 and -2 as well as IEC 60831-1 and -2
- Heavy duty Capacitor Switching Contactors
- Harmonic Filter Reactors with overtemperature switch
- Fuse links, 3-pole, size NH00
- Control terminal strip with control fuse and thermal trip contact for safety shutdown
- Intelligent Power Factor Control Relay of the PQC series

Installation Site

The place of installation must comply with the requirements of the ingress protection and ambient temperature concerned.

Regulations

For installation and connection of Power Factor Correction Capacitors in Germany the following regulations must be complied with: VDE 0100, VDE 0105, VDE 0560 Part 46 and VDE 0106 Part 100 (German Association of Electrical Engineers). In other countries the equivalent local regulations must be followed.

Connection

The power cable and the CT cable enter the bottom of the cabinet through cable glands or rubber sleeves. The power cable is connected directly to the NH fuse base, the cable from the current transformer to the terminal strip.

System Expansion

An extension of the system is possible by adding LSKSZ-P extension units. This extension unit will be integrated in the existing control circuit via the control cable (supplied with the extension unit).

Technical Data

Design	Sheet steel wall cabinet with door right hinged
Rated voltage	400 V/50 Hz
Rated voltage of capacitors	440 V/50 Hz
Ambient temperature	–5 °C to +35 °C
Humidity	Max. 90 %, no condensation
Cabinet colour	RAL 7035
Standards	EN 60831-1 and -2 IEC 60831-1 and -2 EN 61921 IEC 61921 EN 61439-1 and -2 IEC 61439-1 and 2 UKCA

Important Notes

For further information on power factor correction and harmonics please refer to our “Manual of Power Quality”.

FRAKO systems are designed for connecting 5 core cables. If a 4-core cable is used, a jumper must be fitted to connect PE and N, or a control transformer must be installed.

Subject to technical changes / © FRAKO GmbH / www.frako.com

تسلاکالا
021-9102 6126 | teslakala.com

Article-No.	Type	Rated power [kvar]	Stage power [kvar]	Switching sequence	Weight approx. [kg]	Protection IP
Version: P1 (detuning factor p = 14 %)						
34-14950	LSKS 21,88-3,13-111-400-6-620-P1	21.88	3.13	1:2:4	90	IP54
34-14951	LSKS 25-6,25-21-400-6-620-P1	25	6.25	1:1:2	95	IP54
34-14952	LSKS 31,25-6,25-12-400-6-620-P1	31.25	6.25	1:2:2	98	IP54
34-14953	LSKS 34,38-3,13-112-400-6-620-P1	34.38	3.13	1:2:4	102	IP54
34-14954	LSKS 43,75-6,25-111-400-6-620-P1	43.75	6.25	1:2:4	112	IP54
34-14955	LSKS 46,88-3,13-1111-400-6-620-P1	46.88	3.13	1:2:4:8	118	IP54
34-14956	LSKS 50-6,25-211-400-6-620-P1	50	6.25	1:1:2:4	123	IP54
34-14957	LSKS 50-12,5-21-400-6-620-P1	50	12.5	1:1:2	118	IP54
Version: P7 (detuning factor p = 7 %)						
34-14958	LSKS 17,5-2,5-111-400-6-620-P7	17.5	2.5	1:2:4	78	IP54
34-14959	LSKS 25-5-12-400-6-620-P7	25	5	1:2:2	84	IP54
34-14960	LSKS 25-6,25-21-400-6-620-P7	25	6.25	1:1:2	80	IP54
34-14961	LSKS 30-5-11A-400-6-620-P7	30	5	1:2:3	87	IP54
34-14962	LSKS 31,25-6,25-12-400-6-620-P7	31.25	6.25	1:2:2	85	IP54
34-14963	LSKS 43,75-6,25-111-400-6-620-P7	43.75	6.25	1:2:4	90	IP54
34-14964	LSKS 46,88-3,13-1111-400-6-620-P7	46.88	3.13	1:2:4:8	95	IP54
34-14965	LSKS 50-6,25-211-400-6-620-P7	50	6.25	1:1:2:4	97	IP54
34-14966	LSKS 50-12,5-21-400-6-620-P7	50	12.5	1:1:2	93	IP54
Version: P8 (detuning factor p = 8 %)						
34-14958	LSKS 17,5-2,5-111-400-6-620-P8	17.5	2.5	1:2:4	62	IP54
34-14968	LSKS 25-5-12-400-6-620-P8	25	5	1:2:2	66	IP54
34-14969	LSKS 25-6,25-21-400-6-620-P8	25	6.25	1:1:2	65	IP54
34-14970	LSKS 30-5-11A-400-6-620-P8	30	5	1:2:3	74	IP54
34-14971	LSKS 31,25-6,25-12-400-6-620-P8	31.25	6.25	1:2:2	69	IP54
34-14972	LSKS 43,75-6,25-111-400-6-620-P8	43.75	6.25	1:2:4	76	IP54
34-14973	LSKS 46,88-3,13-1111-400-6-620-P8	46.88	3.13	1:2:4:8	79	IP54
34-14974	LSKS 50-6,25-211-400-6-620-P8	50	6.25	1:1:2:4	82	IP54
34-14975	LSKS 50-12,5-21-400-6-620-P8	50	12.5	1:1:2	79	IP54

Recommended supply lead cross sections: please refer to the technical annex.

تسلاکالا
021-9102 6126 | teslakala.com

Options and accessories for Power Factor Correction Systems type LSKS-P 400V, 50 Hz

Article-No.	Type	Description
Options, mounted and wired ready for operation		
S34-5540	-650- (instead of -620)	Power Factor Control Relay PQC-12/1 instead of PQC-6/1
S34-5508	-Li	Cabinet door with door left hinged
S34-0060	-SO	Special painting outside (RAL-Scale)
S34-5511	-S131	Fused Disconnector instead of socket ≤ 60 kvar = 1 pc. > 60 kvar = 2 pcs
S34-0039	-S56	Control switch (On/Off) fitted and connected (requirement for power factor correction systems installed in Switzerland)
S34-5535	-S19	Control phase + N via a protective motor switch (option for France)
S34-5537	-S119 (+ Power)	Control transformer set 315 VA incl. primary and secondary fuses
Accessories, loose		
34-80532	WB LSKS 20	Wall distance assembly set 20 mm
34-80533	WB LSKS 40	Wall distance assembly set 40 mm

Other options and accessories on request

5

Dimensions

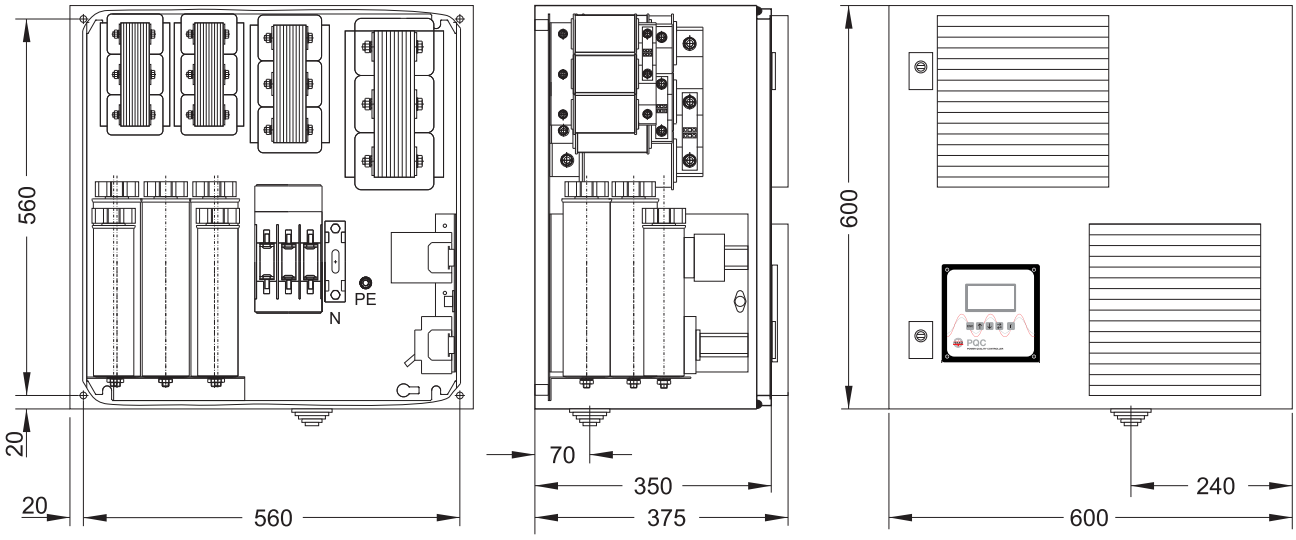

Dimensional drawing LSKS-P (17.5 to 50 kvar)

All dimensions in mm

Subject to technical changes / © FRAKO GmbH / www.frako.com

تسلاکالا
021-9102 6126 | teslakala.com



LSFC-P
Power Factor Correction Systems – detuned

Ready to connect, automatic Power Factor Correction Systems in sheet steel cabinets for floor installation. Detuned – for low-voltage networks with harmonic content.

- Power Range: 75 to 500 kvar
- Modular construction in freestanding sheet steel cabinet
- Ready for connection
- Fully automatic and intelligent Power Factor Control Relay
- Power Factor Correction Capacitors LKT dry-type with four safety features

Application Recommendations

Power Factor Correction Systems, type LSFC-P are suitable for compensation in networks with harmonic distortion according to EN 61000-2-4 class 2.

They are available as follows:

Version	Detuning factor	Resonance frequency
P1	p = 14 %	134 Hz
P7	p = 7 %	189 Hz
P8	p = 8 %	177 Hz
P5	p = 5.67 %	210 Hz

تسلاکالا
021-9102 6126 | teslakala.com

Power Factor Correction Systems

Power Factor Correction Systems – detuned

Power Range

Power Factor Correction System in sheet steel cabinet:

- 75 to 500 kvar

Design

The ready-for-connection Power Factor Correction System consists of pre-assembled capacitor-reactor modules, type C6XD… or C8XD… and the suitable sheet steel cabinet.

The cabinet contains:

- Self-healing LKT type power capacitors with low-loss self-healing dielectric made from segmented metallised polypropylene film. Filled with a PCB-free filler. With discharge resistors, as per EN 60831-1 and -2 as well as IEC 60831-1 and -2
- Heavy duty Capacitor Switching Contactors
- Harmonic Filter Reactors with overtemperature switch
- Fuse links, 3-pole, size NH00
- Control terminal strip with control fuse and thermal trip contact for safety shutdown
- Intelligent Power Factor Control Relay of the PQC series
- Thermostatically controlled motor fan

Installation Site

The place of installation must comply with the requirements of the ingress protection and ambient temperature concerned.

Regulations

For installation and connection of Power Factor Correction Capacitors in Germany the following regulations must be complied with: VDE 0100, VDE 0105, VDE 0560 Part 46 and VDE 0106 Part 100 (German Association of Electrical Engineers). In other countries the equivalent local regulations must be followed.

Connection

The power supply cable and the current transformer cable enter the bottom of the cabinet through a sliding gland plate and a cable clamp rail, the power supply being connected to the busbar system and the current transformer cable to the terminal strip provided.

System Expansion

An extension of the system is possible by adding LSFCZ-P extension units. This extension unit will be integrated in the existing control circuit via the control cable (supplied with the extension unit).

Technical Data

Design	Sheet steel cabinet with door right hinged
Rated voltage	400 V/50 Hz
Rated voltage of capacitors	440 V/50 Hz
Ambient temperature	–5 °C to +40 °C
Humidity	Max. 90 %, no condensation
Cabinet colour	RAL 7035
Standards	EN 60831-1 and -2 IEC 60831-1 and -2 EN 61921 IEC 61921 EN 61439-1 and -2 IEC 61439-1 and 2 UKCA

Important Notes

For further information on power factor correction and harmonics please refer to our “Manual of Power Quality”.

FRAKO systems are designed for connecting 5 core cables. If a 4-core cable is used, a jumper must be fitted to connect PE and N, or a control transformer must be installed.

Subject to technical changes / © FRAKO GmbH / www.frako.com

تسلاکالا
021-9102 6126 | teslakala.com

Version: P1 (Detuning factor p = 14 %)

Article-No.	Type	Rated power [kvar]	Stage power [kvar]	Switching sequence	Dimensions Width [mm]	Height [mm]	Depth [mm]	Weight (gross) approx. [kg]	Protection IP
Power Factor Correction Systems in sheet steel cabinets (width = 600 mm), rated mains voltage: 400 V / 50 Hz Type series: LSFC …-P1									
34-22615	LSFC 75-6,25-212-400-64-620-P1	75	6.25	1:1:2:4:4	600	2000	400	189	20
34-22616	LSFC 75-12,5-11A-400-64-620-P1	75	12.5	1:2:3	600	2000	400	198	20
34-22618	LSFC 87,5-6,25-211A-400-64-620-P1	87.5	6.25	1:1:2:4:6	600	2000	400		20
34-22619	LSFC 87,5-12,5-21A-400-64-620-P1	87.5	12.5	1:1:2:3	600	2000	400		20
34-22620	LSFC 100-6,25-213-400-64-620-P1	100	6.25	1:1:2:4:4:4	600	2000	400		20
34-22621	LSFC 100-12,5-23-400-64-620-P1	100	12.5	1:1:2:2:2	600	2000	400		20
34-22622	LSFC 100-25-4-400-64-620-P1	100	25	1:1:1:1	600	2000	400		20
34-22623	LSFC 112,5-12,5-11B-400-64-620-P1	112.5	12.5	1:2:3:3	600	2000	400		20
34-22624	LSFC 125-12,5-21B-400-64-620-P1	125	12.5	1:1:2:3:3	600	2000	400		20
34-22625	LSFC 150-37,5-4-400-64-620-P1	150	37.5	1:1:1:1	600	2000	400		20
34-22626	LSFC 150-25-22-400-66-620-P1	150	25	1:1:2:2	600	2110	600		41
34-22627	LSFC 175-25-13-400-66-620-P1	175	25	1:2:2:2	600	2110	600		41
34-22628	LSFC 200-50-4-400-66-620-P1	200	50	1:1:1:1	600	2110	600		41
Power Factor Correction Systems, extension units in sheet steel cabinets (width = 600 mm), rated mains voltage: 400 V / 50 Hz Type series: LSFCZ …-P1									
34-16666	LSFCZ 150-50-3-400-66-P1	150	50	1:1:1	600	2110	600		41
34-16667	LSFCZ 200-50-4-400-66-P1	200	50	1:1:1:1	600	2110	600		41
Power Factor Correction Systems in sheet steel cabinets (width = 800 mm), rated mains voltage: 400 V / 50 Hz Type series: LSFC …-P1									
34-22629	LSFC 100-12,5-211-400-85-620-P1	100	12.5	1:1:2:4	800	2110	500	257	41
34-22630	LSFC 100-25-21-400-85-620-P1	100	25	1:1:2	800	2110	500	251	41
34-22631	LSFC 125-12,5-221-400-85-620-P1	125	12.5	1:1:2:2:4	800	2110	500	282	41
34-22632	LSFC 125-25-12-400-85-620-P1	125	25	1:2:2	800	2110	500	264	41
34-22633	LSFC 150-12,5-212-400-85-620-P1	150	12.5	1:1:2:4:4	800	2110	500	309	41
34-22634	LSFC 150-25-22-400-85-620-P1	150	25	1:1:2:2	800	2110	500	301	41
34-22635	LSFC 175-25-13-400-85-620-P1	175	25	1:2:2:2	800	2110	500	328	41
34-22636	LSFC 200-12,5-213-400-85-620-P1	200	12.5	1:1:2:4:4:4	800	2110	500	340	41
34-22637	LSFC 200-25-23-400-85-620-P1	200	25	1:1:2:2:2	800	2110	500	371	41
34-22638	LSFC 225-25-14-400-85-620-P1	225	25	1:2:2:2:2	800	2110	500	382	41
34-22639	LSFC 250-25-24-400-85-620-P1	250	25	1:1:2:2:2:2	800	2110	500	416	41
34-22640	LSFC 250-50-5-400-85-620-P1	250	50	1:1:1:1:1	800	2110	500	403	41
34-22641	LSFC 275-25-15-400-85-620-P1	275	25	1:2:2:2:2:2	800	2110	500	427	41
34-22642	LSFC 300-25-25-400-85-650-P1	300	25	1:1:2:2:2:2:2	800	2110	500	470	41
34-22643	LSFC 300-50-6-400-85-620-P1	300	50	1:1:1:1:1:1	800	2110	500	466	41
34-22644	LSFC 325-25-16-400-85-650-P1	325	25	1:2:2:2:2:2:2	800	2110	500	444	41
34-22645	LSFC 350-25-26-400-85-650-P1	350	25	1:1:2:2:2:2:2:2	800	2110	500	533	41
34-22646	LSFC 350-50-7-400-85-650-P1	350	50	1:1:1:1:1:1:1	800	2110	500	516	41
34-22647	LSFC 375-25-17-400-85-650-P1	375	25	1:2:2:2:2:2:2:2	800	2110	500	534	41
34-22648	LSFC 400-50-8-400-85-650-P1	400	50	1:1:1:1:1:1:1:1	800	2110	500	573	41
34-22649	LSFC 500-50-0-400-86-650-P1	500	50	1:1:1:1:1:1:1:1:1:1	800	2110	600	670	41

تسلاکالا
021-9102 6126 | teslakala.com

Article-No.	Type	Rated power [kvar]	Stage power [kvar]	Switching sequence	Dimensions Width [mm]	Height [mm]	Depth [mm]	Weight (gross) approx. [kg]	Protection IP
Power Factor Correction Systems, extension units in sheet steel cabinets (width = 800 mm), rated mains voltage: 400 V / 50 Hz Type series: LSFCZ …-P1									
34-16209	LSFCZ 100-50-2-400-85-P1	100	50	1:1	800	2110	500	230	41
34-16210	LSFCZ 150-50-3-400-85-P1	150	50	1:1:1	800	2110	500	338	41
34-16211	LSFCZ 200-50-4-400-85-P1	200	50	1:1:1:1	800	2110	500	354	41
34-16212	LSFCZ 250-50-5-400-85-P1	250	50	1:1:1:1:1:1	800	2110	500	397	41
34-16213	LSFCZ 300-50-6-400-85-P1	300	50	1:1:1:1:1:1:1	800	2110	500	460	41
34-16214	LSFCZ 350-50-7-400-85-P1	350	50	1:1:1:1:1:1:1	800	2110	500	503	41
34-16215	LSFCZ 400-50-8-400-85-P1	400	50	1:1:1:1:1:1:1:1	800	2110	500	579	41

Other rated voltages, frequencies and power ratings on request.
Recommended supply lead cross sections: please refer to the technical annex.

Version: P7 (Detuning factor p = 7 %)

Article-No.	Type	Rated power [kvar]	Stage power [kvar]	Switching sequence	Dimensions Width [mm]	Height [mm]	Depth [mm]	Weight (gross) approx. [kg]	Protection IP
Power Factor Correction Systems in sheet steel cabinets (width = 600 mm), rated mains voltage: 400 V / 50 Hz Type series: LSFC …-P7									
34-22650	LSFC 75-6,25-212-400-64-620-P7	75	6.25	1:1:2:4:4	600	2000	400	174	20
34-22651	LSFC 75-12,5-11A-400-64-620-P7	75	12.5	1:2:3	600	2000	400	174	20
34-22653	LSFC 93,75-6,25-1111-400-64-620-P7	93.75	6.25	1:2:4:8	600	2000	400	184	20
34-22654	LSFC 100-12,5-211-400-64-620-P7	100	12.5	1:1:2:4	600	2000	400	188	20
34-22655	LSFC 100-25-21-400-64-620-P7	100	25	1:1:2	600	2000	400	191	20
34-22656	LSFC 125-12,5-221-400-64-620-P7	125	12.5	1:1:2:2:4	600	2000	400	216	20
34-22657	LSFC 125-25-12-400-64-620-P7	125	25	1:2:2	600	2000	400	204	20
34-22658	LSFC 150-12,5-212-400-64-620-P7	150	12.5	1:1:2:4:4	600	2000	400	233	20
34-22659	LSFC 150-25-22-400-64-620-P7	150	25	1:1:2:2	600	2000	400	228	20
34-22660	LSFC 175-25-13-400-64-620-P7	175	25	1:2:2:2	600	2000	400	243	20
34-22661	LSFC 200-12,5-213-400-64-620-P7	200	12.5	1:1:2:4:4:4	600	2000	400	274	20
34-22662	LSFC 200-25-23-400-64-620-P7	200	25	1:1:2:2:2	600	2000	400	268	20
34-22663	LSFC 200-50-4-400-64-620-P7	200	50	1:1:1:1	600	2000	400	268	20
Power Factor Correction Systems, extension units in sheet steel cabinets (width = 600 mm), rated mains voltage: 400 V / 50 Hz Type series: LSFCZ …-P7									
34-16221	LSFCZ 100-50-2-400-64-P7	100	50	1:1	600	2000	400	181	20
34-16222	LSFCZ 150-50-3-400-64-P7	150	50	1:1:1	600	2000	400	226	20
34-16223	LSFCZ 200-50-4-400-64-P7	200	50	1:1:1:1	600	2000	400	193	20
Power Factor Correction Systems in sheet steel cabinets (width = 800 mm), rated mains voltage: 400 V / 50 Hz Type series: LSFC …-P7									
34-22664	LSFC 100-12,5-211-400-84-620-P7	100	12.5	1:1:2:4	800	2000	400	213	20
34-22665	LSFC 100-12,5-211-400-85-620-P7	100	12.5	1:1:2:4	800	2000	500	202	20
34-22666	LSFC 100-25-21-400-84-620-P7	100	25	1:1:2	800	2000	400	189	20
34-22667	LSFC 125-12,5-221-400-84-620-P7	125	12.5	1:1:2:2:4	800	2000	400	218	20
34-22668	LSFC 125-25-12-400-84-620-P7	125	25	1:2:2	800	2000	400	214	20
34-22669	LSFC 150-12,5-212-400-84-620-P7	150	12.5	1:1:2:4:4	800	2000	400	234	20
34-22670	LSFC 150-25-22-400-84-620-P7	150	25	1:1:2:2	800	2000	400	234	20
34-22671	LSFC 175-25-13-400-84-620-P7	175	25	1:2:2:2	800	2000	400	247	20

Subject to technical changes / © FRAKO GmbH / www.frako.com

تسلاکالا
021-9102 6126 | teslakala.com

Article-No.	Type	Rated power [kvar]	Stage power [kvar]	Switching sequence	Dimensions Width [mm]	Height [mm]	Depth [mm]	Weight (gross) approx. [kg]	Protection IP
34-22672	LSFC 187,5-12,5-113-400-84-620-P7	187.5	12.5	1:2:4:4:4	800	2000	400	260	20
34-22673	LSFC 200-12,5-213-400-85-620-P7	200	12.5	1:1:2:4:4:4	800	2000	500	288	20
34-22674	LSFC 200-25-23-400-84-620-P7	200	25	1:1:2:2:2	800	2000	400	263	20
34-22675	LSFC 225-25-14-400-84-620-P7	225	25	1:2:2:2:2	800	2000	400	294	20
34-22676	LSFC 250-25-24-400-84-620-P7	250	25	1:1:2:2:2:2	800	2000	400	314	20
34-22677	LSFC 250-50-5-400-84-620-P7	250	50	1:1:1:1:1	800	2000	400	308	20
34-22678	LSFC 275-25-15-400-84-620-P7	275	25	1:2:2:2:2:2	800	2000	400	326	20
34-22679	LSFC 300-25-25-400-84-650-P7	300	25	1:1:2:2:2:2:2	800	2000	400	347	20
34-22680	LSFC 300-50-6-400-84-620-P7	300	50	1:1:1:1:1:1	800	2000	400	343	20
34-22681	LSFC 325-25-16-400-84-650-P7	325	25	1:2:2:2:2:2:2	800	2000	400	369	20
34-22682	LSFC 350-25-26-400-84-650-P7	350	25	1:1:2:2:2:2:2:2	800	2000	400	384	20
34-22683	LSFC 350-50-7-400-84-650-P7	350	50	1:1:1:1:1:1:1	800	2000	400	384	20
34-22684	LSFC 375-25-17-400-84-650-P7	375	25	1:2:2:2:2:2:2:2	800	2000	400	404	20
34-22685	LSFC 400-25-27-400-84-650-P7	400	25	1:1:2:2:2:2:2:2:2	800	2000	400	420	20
34-22686	LSFC 400-50-8-400-84-650-P7	400	50	1:1:1:1:1:1:1:1	800	2000	400	417	20
34-22687	LSFC 500-50-0-400-85-650-P7	500	50	1:1:1:1:1:1:1:1:1:1	800	2110	500	509	41
Power Factor Correction Systems, extension units in sheet steel cabinets (width = 800 mm), rated mains voltage: 400 V / 50 Hz Type series: LSFCZ …-P7									
34-16202	LSFCZ 100-50-2-400-84-P7	100	50	1:1	800	2000	400	187	20
34-16203	LSFCZ 150-50-3-400-84-P7	150	50	1:1:1	800	2000	400	229	20
34-16204	LSFCZ 200-50-4-400-84-P7	200	50	1:1:1:1	800	2000	400	261	20
34-16205	LSFCZ 250-50-5-400-84-P7	250	50	1:1:1:1:1	800	2000	400	279	20
34-16206	LSFCZ 300-50-6-400-84-P7	300	50	1:1:1:1:1:1	800	2000	400	345	20
34-16207	LSFCZ 350-50-7-400-84-P7	350	50	1:1:1:1:1:1:1	800	2000	400	387	20
34-16208	LSFCZ 400-50-8-400-84-P7	400	50	1:1:1:1:1:1:1:1	800	2000	400	418	20

Versions with an 8 % choke factor are available with the same corrective power and configuration of the capacitance stages.
Other rated voltages, frequencies and power ratings on request.
Recommended supply lead cross sections: please refer to the technical annex.

تسلاکالا
021-9102 6126 | teslakala.com

Version: P5 (Detuning factor p = 5.67 %)

Article-No.	Type	Rated power [kvar]	Stage power [kvar]	Switching sequence	Dimensions Width [mm]	Height [mm]	Depth [mm]	Weight (gross) approx. [kg]	Protection IP
Power Factor Correction Systems in sheet steel cabinets (width = 800 mm), rated mains voltage: 400 V / 50 Hz Type series: LSFC …-P5									
34-22756	LSFC 100-25-21-400-85-650-P5	100	25	1:1:2	800	2110	500	195	41
34-22757	LSFC 125-25-12-400-85-650-P5	125	25	1:2:2	800	2110	500	230	41
34-22758	LSFC 150-25-22-400-85-650-P5	150	25	1:1:2:2	800	2110	500	250	41
34-22759	LSFC 175-25-13-400-85-650-P5	175	25	1:2:2:2	800	2110	500	285	41
34-22760	LSFC 200-25-23-400-85-650-P5	200	25	1:1:2:2:2	800	2110	500	305	41
34-22761	LSFC 225-25-14-400-85-650-P5	225	25	1:2:2:2:2	800	2110	500	330	41
34-22762	LSFC 250-25-24-400-85-650-P5	250	25	1:1:2:2:2:2	800	2110	500	344	41
34-22763	LSFC 250-50-5-400-85-650-P5	250	50	1:1:1:1:1	800	2110	500	396	41
34-22764	LSFC 275-25-15-400-85-650-P5	275	25	1:2:2:2:2:2	800	2110	500	422	41
34-22765	LSFC 300-25-25-400-85-650-P5	300	25	1:1:2:2:2:2:2	800	2110	500	435	41
34-22766	LSFC 300-50-6-400-85-650-P5	300	50	1:1:1:1:1:1	800	2110	500	422	41
34-22767	LSFC 325-25-16-400-85-650-P5	325	25	1:2:2:2:2:2:2	800	2110	500	460	41
34-22768	LSFC 350-25-26-400-85-650-P5	350	25	1:1:2:2:2:2:2:2	800	2110	500	520	41
34-22769	LSFC 350-50-7-400-85-650-P5	350	50	1:1:1:1:1:1:1	800	2110	500	526	41
34-22770	LSFC 375-25-17-400-85-650-P5	375	25	1:2:2:2:2:2:2:2	800	2110	500	555	41
34-22771	LSFC 400-50-8-400-85-650-P5	400	50	1:1:1:1:1:1:1:1	800	2110	500	565	41
34-22772	LSFC 500-50-0-400-86-650-P5	500	50	1:1:1:1:1:1:1:1:1:1	800	2110	600	640	41
Power Factor Correction Systems, extension units in sheet steel cabinets (width = 800 mm), rated mains voltage: 400 V / 50 Hz Type series: LSFCZ …-P5									
34-16634	LSFCZ 100-50-2-400-85-P5	100	50	1:1	800	2110	500	220	41
34-16635	LSFCZ 150-50-3-400-85-P5	150	50	1:1:1	800	2110	500	260	41
34-16636	LSFCZ 200-50-4-400-85-P5	200	50	1:1:1:1	800	2110	500	300	41
34-16637	LSFCZ 250-50-5-400-85-P5	250	50	1:1:1:1:1	800	2110	500	350	41
34-16638	LSFCZ 300-50-6-400-85-P5	300	50	1:1:1:1:1:1	800	2110	500	410	41
34-16639	LSFCZ 350-50-7-400-85-P5	350	50	1:1:1:1:1:1:1	800	2110	500	460	41
34-16640	LSFCZ 400-50-8-400-85-P5	400	50	1:1:1:1:1:1:1:1	800	2110	500	510	41

Other rated voltages, frequencies and power ratings on request.
Recommended supply lead cross sections: please refer to the technical annex.

Subject to technical changes / © FRAKO GmbH / www.frako.com

تسلاکالا
021-9102 6126 | teslakala.com

Options and accessories for Power Factor Correction Systems type LSFC-P 400 V, 50 Hz

Options, mounted and wired ready for operation

Article-No.	Type	Description	for System type
S34-5540	-650- (instead of -620)	Power Factor Control Relay PQC-12/1 instead of PQC-6/1	all
S34-5519	-66- (instead of -64-)	FRAKO LSFC-66, WxHxD: 600x2000x600 mm (without floor standing base and roof)	LSFC-64
S34-5528	-66- (instead of -84-)	FRAKO LSFC-66, WxHxD: 600x2000x600 mm (without floor standing base and roof)	LSFC-84
S34-5503	-84- (instead of -64-)	FRAKO LSFC-84, WxHxD: 800x2000x400 mm (without floor standing base and roof)	LSFC-64
S34-5524	-85- (instead of -84-)	FRAKO LSFC-85, WxHxD: 800x2000x500 mm (without floor standing base and roof)	LSFC-84
S34-5517	-86- (instead of -84/85-)	FRAKO LSFC-86, WxHxD: 800x2000x600 mm (without floor standing base and roof)	LSFC-84/-85
S34-5554	-119- (instead of -64-)	Rittal VX 8604, WxHxD: 600x2000x400 mm (without floor standing base and roof)	LSFC-64
S34-5555	-118- (instead of -84/85-)	Rittal VX 8606 WxHxD: 600x2000x600 mm (without floor standing base and roof)	LSFC-84/-85
S34-5556	-117- (instead of -84-)	Rittal VX 8804, WxHxD: 800x2000x400 mm (without floor standing base and roof)	LSFC-84
S34-5557	-116- (instead of -85-)	Rittal VX 8805, WxHxD: 800x2000x500 mm (without floor standing base and roof)	LSFC-85
S34-5558	-115- (instead of -84-)	Rittal VX 8806, WxHxD: 800x2000x600 mm (without floor standing base and roof)	LSFC-84
S34-5559	-115- (instead of -85-)	Rittal VX 8806, WxHxD: 800x2000x600 mm (without floor standing base and roof)	LSFC-85
S34-5509	-Li	Cabinet door with door left hinged	
S34-5023	-S60	Pivoting lever closure for mounting a semiprofile cylinder	all
S34-0060	-SO (+ Description)	Special painting outside (RAL-Scale)	all
S34-0010	-S1	Cable entry through the switch cabinet roof with connection at the top	up to 400 kvar/Cabinet
S34-5512	-54	Ingress protection IP54	≤ 300 kvar/Cabinet
S34-5513	-54	Ingress protection IP54	> 300 ≤ 400 kvar/Cabinet
S34-5523	-S572	Ingress protection IP41, roof vent installation on cabinet instead of a roof vent installation in cabinet	≤ 400 kvar/Cabinet
S34-5511	-S131	Fuse switch disconnector instead of fuse base per 50 kvar	all
S34-5514	-SLTA	Fuse switch disconnector in cable entry compartment	≤ 200 kvar/Cabinet
S34-5515	-SLTA	Fuse switch disconnector in cable entry compartment	≤ 300 kvar/Cabinet
S34-0108	-LSA	Switch disconnector* three-pole, 400 A in cable entry compartment	≤ 200 kvar/Cabinet
S34-0106	-LSA	Switch disconnector* three-pole, 630 A in cable entry compartment,	≤ 300 kvar/Cabinet
S34-0039	-S56	Control switch (On/Off) fitted and connected (requirement for power factor correction systems installed in Switzerland)	all
S34-5535	-S19	Control phase + N via a protective motor switch (option for France)	all
S34-5536	-S119	Control transformer set 500 VA primary and secondary fuses	≤ 500 kvar
S34-5526	-S119	Control transformer set 800 VA incl. primary and secondary fuses	> 500 ≤ 900 kvar
S34-0040	-S66	Summation current transformer 5+5/5A	all
S34-0081	-S66	Summation current transformer 5+5+5/5A	all
S34-5049	-S145	Switch cabinet lighting with power outlet and position switch	all

*) Switch disconnector can be operated from the outside

تسلاکالا
021-9102 6126 | teslakala.com

Accessories

Article-No.	Type	Description	Dimensions (W x D) in mm	for System type
34-80439	KR-VX-LSFC-64	Floor standing base (h = 100 mm), loose	600 x 400	LSFC/VX-64
34-80440	KR-VX-LSFC-64	Floor standing base (h = 200 mm), loose	600 x 400	LSFC/VX-64
34-80441	KR-VX-LSFC-66	Floor standing base (h = 100 mm), loose	600 x 600	LSFC/VX-66
34-80442	KR-VX-LSFC-66	Floor standing base (h = 200 mm), loose	600 x 600	LSFC/VX-66
34-80443	KR-VX-LSFC-84	Floor standing base (h = 100 mm), loose	800 x 400	LSFC/VX-84
34-80444	KR-VX-LSFC-84	Floor standing base (h = 200 mm), loose	800 x 400	LSFC/VX-84
34-80445	KR-VX-LSFC-85	Floor standing base (h = 100 mm), loose	800 x 500	LSFC/VX-85
34-80309	KR-VX-LSFC-85	Floor standing base (h = 200 mm), loose	800 x 500	LSFC/VX-85
34-80446	KR-VX-LSFC-86	Floor standing base (h = 100 mm), loose	800 x 600	LSFC/VX-86
34-80310	Rittal VX25/TS8-86	Floor standing base (h = 200 mm), loose	800 x 600	LSFC/VX-86

Other options and accessories on request

Dimensions

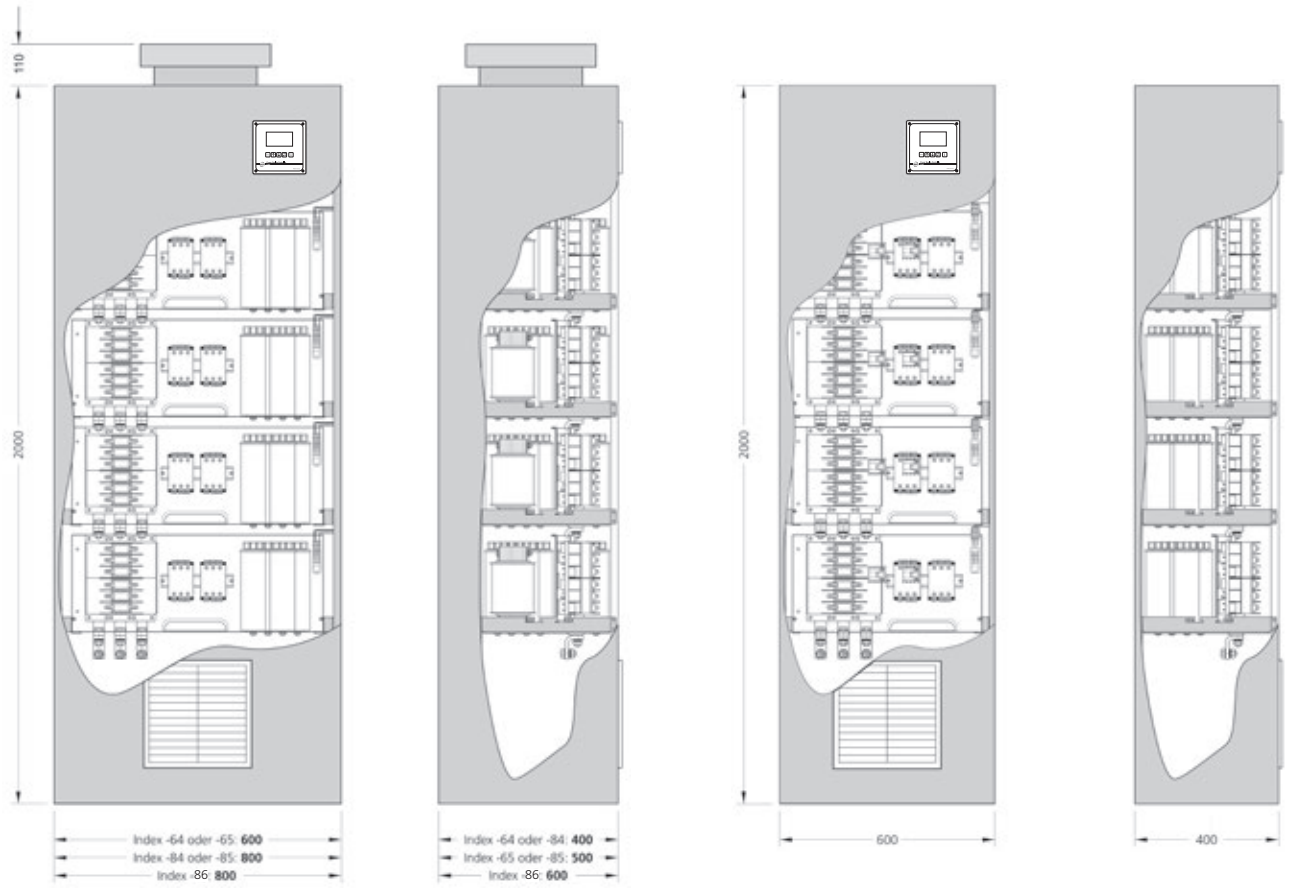

Dimensional drawing LSFC-P (100 to 500 kvar)

All dimensions in mm

Subject to technical changes / © FRAKO GmbH / www.frako.com

تسلاکالا
021-9102 6126 | teslakala.com

Base/plinth system VX

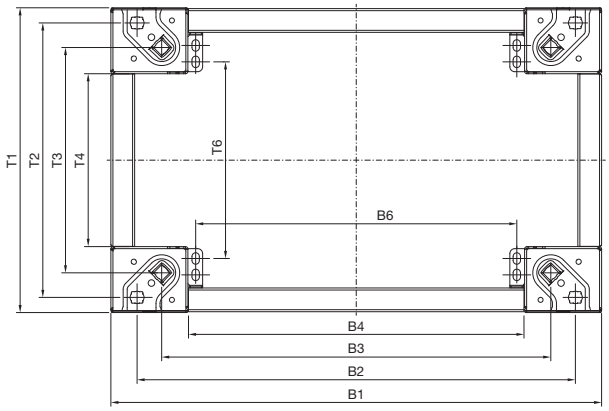

Dimensional drawing base/plinth 100 mm high

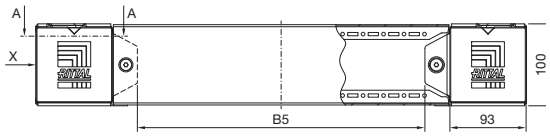

Dimensional drawing base/plinth 200 mm high

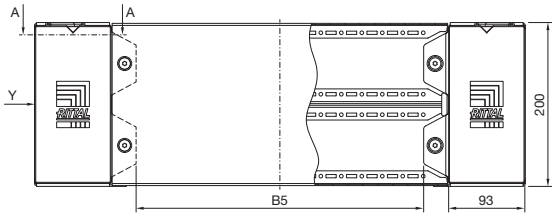

Description of the hole pattern

B1 = Width of the base
B2/B3 = Mounting to the cabinet/floor
B4 = Front/rear base panel
B5 = Clear underpass height
B6 = Floor mounting
B7 = Mounting of the base panel
T1 = Depth of the base
T2/T3 = Mounting to the cabinet/floor
T4 = Side base panel
T6 = Floor mounting

Base/plinth trim panels, solid, 100 mm high, front view

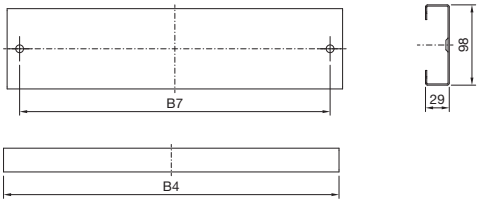

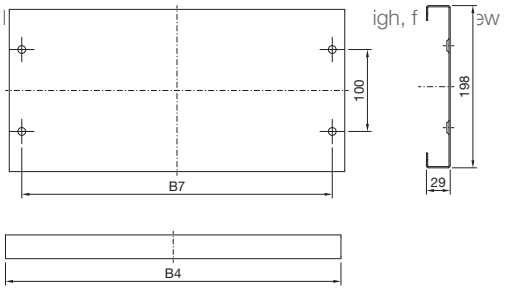

For enclosure width or depth mm	Width dimensions mm				Length dimensions mm			Depth dimensions mm				
	B1	B2	B3	B4	L1	L2	L3	T1	T2	T3	T4	T5[1)]
400	366	335	275	211	260	209	257	364	335	275	211	325
500	466	435	375	311	360	309	357	464	435	375	311	425
600	566	535	475	411	460	409	457	564	535	475	411	525
800	766	735	675	611	660	609	657	764	735	675	611	725

[1)] T5 = Distance between system punchings including base/plinth installation bracket

All dimensions in mm

تسلاکالا
021-9102 6126 | teslakala.com

Subject to technical changes / © FRAKO GmbH / www.frako.com

تسلاکالا
021-9102 6126 | teslakala.com



MCS
Modular Construction System

The FRAKO Modular Construction System MCS is a modular system, with which a skilled switchgear manufacturer can design a technically high-quality Power Factor Correction System. However, knowing our “Manual of Power Quality” is absolutely important to design such a Power Factor Correction System. In this manual one will find all the necessary planning information as well as all the important technical data. You can download the manual free of charge from our website or order it free of charge from your local FRAKO partner.

The FRAKO MCS consists of selected and tested components for designing Power Factor Correction Systems. FRAKO uses these components for its own production of Power Factor Correction Systems in Teningen. This way the skilled switchgear manufacturer can gain from an experience and application know-how of more than 85 years.

The FRAKO Modular Construction System contains the following components:

- Power Factor Control Relay
- Control terminal strip for Power Factor Control Relay and Power Factor Correction Systems
- Control wires
- Busbar holders
- NH-fuse base and NH-isolating switch
- NH-fuse links
- Contactors
- Discharge Reactors
- Harmonic Filter Reactors
- Power Factor Correction Capacitors
- Thyristor switches

تسلاکالا
021-9102 6126 | teslakala.com

Technical Data

For the design of Power Factor Correction Systems **FRAKO** recommends to use the below-mentioned devices and fuses.

• Busbar Holders

The busbar holders have a centre to centre distance of 60 mm to the single copper busbars. The copper busbars have either dimensions of 30 × 5 mm or 30 × 10 mm, depending on the total power of the Power Factor Correction System.

Article-No.	Description
34-80375	Busbar holder with a bar centre to centre distance of 60 mm, Cu 30 x 10 mm



34-80375

• NH-Isolating Switch

NH-isolating switch size 00. Applicable up to a mains rated voltage of 690 V AC. Available as NH-bus-mounting isolating switches for direct mounting on a busbar system with 60 mm bar centre to centre distance or for mounting on mounting plates.

Article-No.	Description
34-80374	NH-isolating switch for plate mounting, size 00, 160 A, 690 V AC
34-80281	NH-bus-mounting isolating switch, size 00, 160 A, 690 V AC



34-80281



34-80374

• NH-Fuse Holders

To assemble reasonably priced Power Factor Correction Systems, NH-fuse holders size 00 up to a mains rated voltage of 690 V AC, can be used. These NH-fuse holders are also available as bus-mounting fuse holders for direct mounting on a busbar system with a bar centre to centre distance of 60 mm, or for mounting on mounting plates.

Article-No.	Description
34-80372	NH-bus-mounting fuse base, size 00, 160 A, 690 V AC
34-80272	NH-fuse base for plate mounting, size 00, 160 A, 690 V AC
34-80373	Cover for NH-fuses with nonisolated grip lugs



34-80272



34-80372



34-80373

When operating the above mentioned devices, please note that special attention has to be paid to the corresponding safety regulations, especially the regulations concerning accident prevention!

Subject to technical changes / © FRAKO GmbH / www.frako.com

تسلاکالا
021-9102 6126 | teslakala.com

- **Fuses**

Article-No.	Description
90-00289	Cylindrical fuse 10x38 6 A 500 V (for PQC)
90-00367	Cylindrical fuse 14x51 6 A 690 V (for PQC)
90-00062	Fuse link with isolated metal grip lugs 25 A, 500 V AC
90-00056	Fuse link with isolated metal grip lugs 35 A, 500 V AC
90-00055	Fuse link with isolated metal grip lugs 50 A, 500 V AC
90-00054	Fuse link with isolated metal grip lugs 63 A, 500 V AC
90-00053	Fuse link with isolated metal grip lugs 80 A, 500 V AC
90-00052	Fuse link with isolated metal grip lugs 100 A, 500 V AC
90-00051	Fuse link with isolated metal grip lugs 125 A, 500 V AC
90-00050	Fuse link with isolated metal grip lugs 160 A, 500 V AC
90-00230	Fuse link with isolated metal grip lugs 35 A, 690 V AC
90-00132	Fuse link with isolated metal grip lugs 40 A, 690 V AC
90-00111	Fuse link with isolated metal grip lugs 50 A, 690 V AC
90-00133	Fuse link with isolated metal grip lugs 63 A, 690 V AC

For options and accessory equipment for PFC Systems, module rails, ordering examples and dimensional drawings see page 87 ff.

تسلاکالا
021-9102 6126 | teslakala.com

Technical Annex

Supply Lead Cross Sections

Page 153

Guide to selection: Harmonic Filter Reactors → Capacitors

Page 155

Subject to technical changes / © FRAKO GmbH / www.frako.com

تسلاکالا
021-9102 6126 | teslakala.com



Supply lead cross sections for Power Factor Correction Systems

Connection, fuses and supply lead cross sections
When installation work is carried out, the regulations VDE 0100 and VDE 0105, of the German Association for Electrical, Electronic & Information Technologies, the general guidelines of the BDEW (German Association of Energy and Water Industries) and the conditions of supply of the utility company concerned must be complied with. EN 60831-1 resp. VDE 0560 Part 46 state that capacitor units must be suitable for a continuous r.m.s. current of 1.3 times the current that is drawn at the sinusoidal rated voltage and rated frequency. If the capacitance tolerance of 1.1 × C_N is also taken into account, the maximum allowable current can reach values of up to 1.43 × I_N. This overload capability together with the high in-rush current to the capacitors must be taken into account when designing protective devices and cable cross sections.

Note! FRAKO power capacitors offer a current load capacity of 1.5 up to 2.7 × I_N at rated voltage.

FRAKO Power Factor Correction Capacitors with terminal base ensure a maintenance free electrical contact with the connecting wire by using the patented spring clamp technology! The terminal base provides protection against accidental contact! The connecting wires have to be flexible in order not to hinder the proper function of the overpressure disconnector.

Please note that the current transformer, needed for the operation of the system, is not included with delivery.

تسلاکالا
021-9102 6126 | teslakala.com

Rated mains voltage: 400 V / 50 Hz

Power rating [kvar]	Rated current [A]	Fuse gL/gG [A]	Supply lead cross section[1] (4-wire) [mm]	Supply lead cross section[1] (5-wire) [mm]
7.50	11	16	4 x 2.5	5 x 2.5
10.00	14	20	4 x 2.5	5 x 2.5
12.50	18	25	4 x 4	5 x 4
15.00	22	35	4 x 6	5 x 6
17.50	25	35	4 x 6	5 x 6
20.00	29	50	4 x 10	4 x 10/ 10
25.00	36	50	4 x 16	4 x 16/ 16
27.50	40	63	4 x 16	4 x 16/ 16
30.00	43	63	4 x 16	4 x 16/ 16
31.25	45	63	4 x 16	4 x 16/ 16
37.50	54	80	3 x 25/16	4 x 25/ 16
40.00	58	80	3 x 25/16	4 x 25/ 16
43.75	63	100	3 x 35/16	4 x 35/ 16
46.88	68	100	3 x 35/16	4 x 35/ 16
50.00	72	100	3 x 35/16	4 x 35/ 16
52.50	76	125	3 x 50/25	4 x 50/ 25
60.00	87	125	3 x 50/25	4 x 50/ 25
62.50	90	125	3 x 50/25	4 x 50/ 25
68.75	99	160	3 x 70/35	4 x 70/ 35
75.00	108	160	3 x 70/35	4 x 70/ 35
80.00	115	160	3 x 70/35	4 x 70/ 35
93.75	135	200	3 x 95/50	4 x 95/ 50
100.00	144	200	3 x 95/50	4 x 95/ 50
112.50	162	250	3 x 120/70	4 x 120/ 70
125.00	180	250	3 x 120/70	4 x 120/ 70
143.75	207	315	3 x 185/95	4 x 185/ 95
150.00	217	315	3 x 185/95	4 x 185/ 95
175.00	253	400	2 x 3 x 95/50	2 x 4 x 95/ 50
187.50	271	400	2 x 3 x 95/50	2 x 4 x 95/ 50
200.00	289	400	2 x 3 x 95/50	2 x 4 x 95/ 50
225.00	325	500	2 x 3 x 120/70	2 x 4 x 120/ 70
250.00	361	500	2 x 3 x 120/70	2 x 4 x 120/ 70
275.00	397	630	2 x 3 x 185/95	2 x 4 x 185/ 95
300.00	433	630	2 x 3 x 185/95	2 x 4 x 185/ 95
325.00	469	800	2 x 3 x 240/120	2 x 4 x 240/ 120
350.00	505	800	2 x 3 x 240/120	2 x 4 x 240/ 120
375.00	541	800	2 x 3 x 240/120	2 x 4 x 240/ 120
400.00	577	800	2 x 3 x 240/120	2 x 4 x 240/ 120
450.00	650	1000	3 x 3 x 185/95	3 x 4 x 185/ 95
500.00	722	1000	3 x 3 x 185/95	3 x 4 x 185/ 95

[1] Recommended supply lead cross section according to VDE 0298, table 4, installation type C

The neutral conductor requires a minimum cross section of 1.5 mm².

Subject to technical changes / © FRAKO GmbH / www.frako.com

تسلاکالا
021-9102 6126 | teslakala.com



Harmonic Filter Reactors (Standard)
Guide to selection: Harmonic Filter Reactors → Capacitors

Guide to selection: Harmonic Filter Reactors → Capacitors
The following recommended capacitors may differ from the assembly of our power factor correction systems.

Standard Harmonic Filter Reactors
Detuning factor p = 5.67 %

Article-No.	Type	Q [kvar]	C [µF]	Type and quantity of the capacitors required										
				LKT 14,1-440-DP Article-No. 31-10673	LKT 28,2-440-DP Article-No. 31-10535									
FDR: V_N = 400 V / 50 Hz														
88-02141	FDR 25-400-P5	25.0	3 x 155.2	2	1									
88-02142	FDR 50-400-P5	50.0	3 x 310.4	4	2									

تسلاکالا
021-9102 6126 | teslakala.com

Detuning factor p = 7 %

Article-No.	Type	Q [kvar]	C [µF]	Type and quantity of the capacitors required											
				LKT 10-440-DP Article-No. 31-10508	LKT 10-525-DP Article-No. 31-10517	LKT 10-400-DP Article-No. 31-10380	LKT 12,5-400-DP Article-No. 31-10502								
FDR/FKD: V_N = 230 V / 50 Hz															
88-01980	FDR 5-230-P7	5.0	3 x 93.3	1	1										
88-01575	FKD 10-230-P7	10.0	3 x 200.0			3									
88-01974	FDR 12,5-230-P7	12.5	3 x 232.1			1	2								
88-01583	FKD 16,7-230-P7	16.7	3 x 334.0				4								
88-01576	FKD 20-230-P7	20.0	3 x 400.0			6									
88-01943	FDR 25-230-P7	25.0	3 x 464.2			2	4								
88-01568	FKD 33-230-P7	33.0	3 x 668.0				8								

Article-No.	Type	Q [kvar]	C [µF]	Type and quantity of the capacitors required											
				LKT 5,5-600-DP Article-No. 31-10802	LKT 5,4-525-DP 31-10678	LKT 11,3-440-DP Article-No. 31-10672	LKT 10,9-600-EP Article-No. 31-10805	LKT 9,1-480-DP Article-No. 31-10674	LKT 10,8-480-DP Article-No. 31-10675	LKT 12,5-440-DP Article-No. 31-10507	LKT 14,1-440-DP Article-No. 31-10673		LKT 28,2-440-DP Artikel-Nr. 31-10535	LKT 12,5-440-DP Article-No. 31-10507	
FKD/FDR: V_N = 400 V / 50 Hz															
88-01640	FKD 2,5-400-P7	2.5	3 x 16.6	1											
88-01719	FKD 3,13-400-P7	3.13	3 x 19.9		1										
88-01481	FKD 5-400-P7	5.0	3 x 33.2				1								
88-01410	FKD 6.25-400-P7	6.25	3 x 41.5					1							
88-01482	FKD 7.5-400-P7	7.5	3 x 49.7						1						
88-01479	FKD 10-400-P7	10.0	3 x 66.3							1					
88-01767	FDR 12.5-400-P7	12.5	3 x 77.1								1				
88-01362	FKD 15-400-P7	15.0	3 x 99.5						2						
88-01922	FDR 16.7-400-P7	16.7	3 x 102.9			1		1							
88-01363	FKD 20-400-P7	20.0	3 x 132.6							2					
88-01768	FDR 25-400-P7	25.0	3 x 154.2								2	or	1		
88-01484	FKD 30-400-P7	30.0	3 x 198.9							3					
88-01923	FDR 33.3-400-P7	33.3	3 x 205.8											3	
88-02053	FDR 37.5-400-P7	37.5	3 x 213.9								3				
88-01782	FDR 40-400-P7	40.0	3 x 248.8			4									
88-01769	FDR 50-400-P7	50.0	3 x 308.4								4	or	2		

Subject to technical changes / © FRAKO GmbH / www.frako.com

تسلاکالا
021-9102 6126 | teslakala.com

Article-No.	Type	Q [kvar]	C [µF]	Type and quantity of the capacitors required: LKT 9,3-525-DP Article-No. 31-10801
FDR: V_N = 415 V / 50 Hz				
88-02034	FDR 6,25-415-P7	6.3	3 x 35.9	1
88-01937	FDR 12,5-415-P7	12.5	3 x 71.4	2
88-01938	FDR 25-415-P7	25.0	3 x 142.8	4
88-01930	FDR 50-415-P7	50.0	3 x 285.6	8

Type and quantity of the capacitors required on request

Article-No.	Type	Q [kvar]	C [µF]	Type and quantity of the capacitors required: LKT 9,3-525-DP Article-No. 31-10801
FDR/FKD: V_N = 440 V / 50 Hz				
88-02160	FDR 6,25-440-P7	6.3	3 x 32.1	1
88-02161	FDR 12,5-440-P7	12.5	3 x 64.2	2
88-01008	FKD 25-440-P7	25.0	3 x 132.8	4
88-01124	FKD 50-440-P7	50.0	3 x 265.6	8

Article-No.	Type	Q [kvar]	C [µF]	Type and quantity of the capacitors required: LKT 5,5-600-DP Article-No. 31-10802	LKT 7,7-600-DP Article-No. 31-10803	LJT 10-600-DP Article-No. 31-10804
FDR/FKD: V_N = 525 V / 50 Hz						
88-01801	FDR 6,25-525-P7	6.3	3 x 22.9		1	
88-01802	FDR 12,5-525-P7	12.5	3 x 45.8		2	
88-01080	FKD 20-525-P7	20.0	3 x 80.5	1		2
88-01838	FDR 25-525-P7	25.0	3 x 89.5			3
88-01837	FDR 50-525-P7	50.0	3 x 179.0			6
88-01872	FDR 50-525-P7	50.0	3 x 179.0			6

تسلاکالا
021-9102 6126 | teslakala.com

Article-No.	Type	Q [kvar]	C [µF]	Type and quantity of the capacitors required: LKT 13,3-800-DP Article-No. 31-10572	LKT 28,2-760-DP Article-No. 31-10569									
FKD/FDR: V_N = 690 V / 50 Hz														
88-01825	FKD 10-690-P7	10.0	3 x 22.1	1										
88-01932	FDR 25-690-P7	25.0	3 x 51.5		1									
88-01933	FDR 50-690-P7	50.0	3 x 103.1		2									

Article-No.	Type	Q [kvar]	C [µF]	Type and quantity of the capacitors required: LKT 10-525-DP Article-No. 31-10517	LKT 14,1-440-DP Article-No. 31-10673	LKT 10-400-DP Article-No. 31-10380	LKT 12,5-400-DP Article-No. 31-10502							
FDR: V_N = 230 V / 60 Hz														
88-01996	FDR 2,5-230-P7-60	2.5	3 x 38.5	1										
88-01997	FDR 5-230-P7-60	5.0	3 x 77.3		1									
88-01998	FDR 10-230-P7-60	10.0	3 x 154.6		2									
88-02140	FDR 12,5-230-P7-60	12.5	3 x 194.3	*										
88-02001	FDR 20-230-P7-60	20.0	3 x 309.2		4									
88-01892	FDR 25-230-P7-60	25.0	3 x 385.5			2	3							

Article-No.	Type	Q [kvar]	C [µF]	Type and quantity of the capacitors required: LKT 15,5-480-DP Article-No. 31-10382										
FDR: V_N = 380 V / 60 Hz														
88-02179	FDR 12,5-380-P7-60	12.5	3 x 71.4	1										
88-02180	FDR 25-380-P7-60	25.0	3 x 142.8	2										
88-02181	FDR 50-380-P7-60	50.0	3 x 285.6	4										

* Type and quantity of the capacitors required on request

Subject to technical changes / © FRAKO GmbH / www.frako.com

تسلاکالا
021-9102 6126 | teslakala.com

Article-No.	Type	Q [kvar]	C [µF]	Type and quantity of the capacitors required: LKT 10,9-600-DP Article-No. 31-10805											
FDR: V_N = 400 V / 60 Hz															
88-01963	FDR 12,5-400-P7-60	12.5	3 x 64.2	2											
88-01964	FDR 25-400-P7-60	25.0	3 x 128.1	4											
88-01965	FDR 50-400-P7-60	50.0	3 x 256.9	8											

Article-No.	Type	Q [kvar]	C [µF]	Type and quantity of the capacitors required: LKT 10-600-DP Article-No. 31-10804	LKT 10,9-600-DP Article-No. 31-10805	LKT 7,7-600-DP Article-No. 31-10803	LKT 15,5-480-DP Article-No. 31-10382	LKT 9,3-525-DP Article-No. 31-10801							
FKD/FDR: V_N = 440 V / 60 Hz															
88-01914	FKD 6,25-440-P7-60	6.3	3 x 29.9	1											
88-01795	FDR 7,5-440-P7-60	7.5	3 x 32.0		1										
88-01883	FDR 12,5-440-P7-60	12.5	3 x 54.8		1	1									
88-01796	FDR 15-440-P7-60	15.0	3 x 64.0		2										
88-01884	FDR 25-440-P7-60	25.0	3 x 107.2				1	1							
88-01875	FDR 50-440-P7-60	50.0	3 x 214.2				3								

Article-No.	Type	Q [kvar]	C [µF]	Type and quantity of the capacitors required: LKT 5-690-DP Article-No. 31-10560	LKT 5,4-525-DP Article-No. 31-10678	LKT 10-525-DP Article-No. 31-10517	LKT 12,5-525-DP Article-No. 31-10516								
FKD/FDR: V_N = 460 V / 60 Hz															
88-02123	FKD 2,5-460-P7-60	2.5	3 x 11.1	1											
88-02124	FKD 5-460-P7-60	5.0	3 x 20.7		1										
88-02125	FDR 10-460-P7-60	10.0	3 x 38.5			1									
88-01854	FDR 12,5-460-P7-60	12.5	3 x 48.1				1								
88-01855	FDR 25-460-P7-60	25.0	3 x 96.2				2								
88-01856	FDR 50-460-P7-60	50.0	3 x 192.4				4								

تسلاکالا
021-9102 6126 | teslakala.com

Article-No.	Type	Q [kvar]	C [µF]	Type and quantity of the capacitors required										
				LKT 7,7-600-DP Article-No. 31-10803	LKT 10-600-DP Article-No. 31-10804	LKT 10,9-600-DP Article-No. 31-10805								
FDR/FKD: V_N = 480 V / 60 Hz														
88-01962	FDR 12,5-480-P7-60	12.5	3 x 45.6	2										
88-02056	FDR 25-480-P7-60	25.0	3 x 89.7		3									
88-01732	FKD 50-480-P7-60	50.0	3 x 192.0			6								

Detuning factor p = 8 %

Article-No.	Type	Q [kvar]	C [µF]	Type and quantity of the capacitors required												
				LKT 5,5-600-DP Article-No. 31-10802	LKT 5,4-525-DP Article-No. 31-10678	LKT 11,3-440-DP Article-No. 31-10672	LKT 10,9-600-DP Article-No. 31-10805	LKT 9,1-480-DP Article-No. 31-10674	LKT 10,8-480-DP Article-No. 31-10675	LKT 12,5-440-DP Article-No. 31-10507	LKT 14,1-440-DP Article-No. 31-10673		LKT 28,2-440-DP Article-No. 31-10535	LKT 12,5-440-DP Article-No. 31-10507
FKD/FDR: V_N = 400 V / 50 Hz														
88-01678	FKD 2,5-400-P8	2.5	3 x 16.6	1										
88-01941	FKD 3,13-400-P8	3.1	3 x 19.9		1									
88-01518	FKD 5-400-P8	5.0	3 x 33.2				1							
88-01492	FKD 6,25-400-P8	6.25	3 x 41.5					1						
88-01519	FKD 7,5-400-P8	7.5	3 x 49.7						1					
88-01520	FKD 10-400-P8	10.0	3 x 66.3							1				
88-01770	FDR 12,5-400-P8	12.5	3 x 77.1								1			
88-01381	FKD 15-400-P8	15.0	3 x 99.5						2					
88-01926	FDR 16,7-400-P8	16.7	3 x 102.9			1		1						
88-01382	FKD 20-400-P8	20.0	3 x 132.6							2				
88-01771	FDR 25-400-P8	25.0	3 x 154.2								2	or	1	
88-01387	FKD 30-400-P8	30.0	3 x 198.9							3				
88-01927	FDR 33,3-400-P8	33.3	3 x 205.9											3
88-02054	FDR 37,5-400-P8	37.5	3 x 231.9								3			
88-01781	FDR 40-400-P8	40.0	3 x 248.8			4								
88-01772	FDR 50-400-P8	50.0	3 x 308.4								4	or	2	

Subject to technical changes / © FRAKO GmbH / www.frako.com

تسلاکالا
021-9102 6126 | teslakala.com

Article-No.	Type	Q [kvar]	C [µF]	Type and quantity of the capacitors required: LKT 9,3-525-DP Article-No. 31-10801											
FDR: V_N = 480 V / 50 Hz															
88-01985	FDR 25-480-P8	25.0	3 x 107.4	3											
88-01986	FDR 50-480-P8	50.0	3 x 214.8	6											

Article-No.	Type	Q [kvar]	C [µF]	Type and quantity of the capacitors required: LKT 5,5-600-DP Article-No. 31-10802	LKT 10-600-DP Article-No. 31-10804	LKT 10,9-600-DP Article-No. 31-10805									
FKD/FDR: V_N = 525 V / 50 Hz															
88-01845	FKD 20-525-P8	20.0	3 x 80.5	1	2										
88-01840	FDR 25-525-P8	25.0	3 x 89.5		3										
88-01846	FDR 30-525-P8	30.0	3 x 112.7	1		3									
88-01839	FDR 50-525-P8	50.0	3 x 179.0		6										
88-01871	FDR 50-525-P8	50.0	3 x 179.0		6										

Article-No.	Type	Q [kvar]	C [µF]	Type and quantity of the capacitors required: LKT 28,2-760-DP Article-No. 31-10569	LKT 6,7-800-DP Article-No. 31-10570	LKT 26,7-800-DP Article-No. 31-10574									
FKD/FDR: V_N = 690 V / 50 Hz															
88-01807	FKD 25-690-P8	25.0	3 x 55.3		1	2									
88-01912	FDR 50-690-P8	50.0	3 x 103.1	4											

تسلاکالا
021-9102 6126 | teslakala.com

Detuning factor p = 14 %

Article-No.	Type	Q [kvar]	C [µF]	Type and quantity of the capacitors required										
				LKT 10-400-DP Article-No. 31-10380	LKT 11,3-440-DP Article-No. 31-10672	LKT 12,5-400-DP Article-No. 31-10502								
FDR: V_N = 230 V / 50 Hz														
88-02020	FDR 15-230-P1	15.0	3 x 260.3	3	1									
88-01868	FDR 30-230-P1	30.0	3 x 519.9	4		3								

Article-No.	Type	Q [kvar]	C [µF]	Type and quantity of the capacitors required										
				LKT 5,5-600-DP Article-No. 31-10802	LKT 9,3-525-DP Article-No. 31-10801	LKT 9,1-480-DP Article-No. 31-10674	LKT 12,5-525-DP Article-No. 31-10516	LKT 10,8-480-DP Article-No. 31-10675	LKT 14,4-480-DP Article-No. 31-10676	LKT 12,5-480-DP Article-No. 31-10390				
FDR: V_N = 400 V / 50 Hz														
88-01834	FDR 3,13-400-P1	3.13	3 x 16.6	1										
88-02186	FDR 6,25-400-P1	6.25	3 x 35.9		1									
88-01695	FDR 10-400-P1	10.0	3 x 59.8							1				
88-01168	FDR 12.5-400-P1	12.5	3 x 71.4		2									
88-02187	FDR 15-400-P1	15.0	3 x 89.6			1	1							
88-02177	FDR 16,7-400-P1	16.7	3 x 95.8				2							
88-01038	FDR 20-400-P1	20.0	3 x 113.1							2				
88-01171	FDR 25-400-P1	25.0	3 x 142.8				3							
88-01039	FDR 30-400-P1	30.0	3 x 174.3							3				
88-01925	FDR 33,3-400-P1	33.3	3 x 190.7						2	1				
88-02176	FDR 37,5-400-P1	37.5	3 x 214.2					2		2				
88-02175	FDR 40-400-P1	40.0	3 x 232.4							4				
88-02174	FDR 50-400-P1	50.0	3 x 285.6							5				

Article-No.	Type	Q [kvar]	C [µF]	Type and quantity of the capacitors required										
				LKT 10,9-600-DP Article-No. 31-10805										
FDR: V_N = 415 V / 50 Hz														
88-01956	FDR 25-415-P1	25.0	3 x 132.6	4										
88-01957	FDR 50-415-P1	50.0	3 x 265.2	8										

Subject to technical changes / © FRAKO GmbH / www.frako.com

تسلاکالا
021-9102 6126 | teslakala.com

Article-No.	Type	Q [kvar]	C [µF]	Type and quantity of the capacitors required										
				LKT 10-600-DP Article-No. 31-10804	LKT 12,5-525-DP Article-No. 31-10516									
FDR: V_N = 440 V / 50 Hz														
88-02041	FDR 25-440-P1	25.0	3 x 118.0	4										
88-02007	FDR 50-440-P1	50.0	3 x 240.5		5									

Article-No.	Type	Q [kvar]	C [µF]	Type and quantity of the capacitors required										
				LKT 15-690-DP Article-No. 31-10563										
FDR: V_N = 480 V / 50 Hz														
88-02143	FDR 25-480-P1	25.0	3 x 100.2	3										
88-02144	FDR 50-480-P1	50.0	3 x 199.3	6										

Article-No.	Type	Q [kvar]	C [µF]	Type and quantity of the capacitors required										
				LKT 7,7-600-DP Article-No. 31-10803	LKT 10-600-DP Article-No. 31-10804	LKT 10,9-600-DP Article-No. 31-10805								
FDR: V_N = 525 V / 50 Hz														
88-02039	FDR 12,5-525-P1	12.5	3 x 45.4	2										
88-01960	FDR 25-525-P1	25.0	3 x 84.4	1	1	1								
88-01900	FDR 50-525-P1	50.0	3 x 168.8	2	2	2								

تسلاکالا
021-9102 6126 | teslakala.com

Article-No.	Type	Q [kvar]	C [µF]	Type and quantity of the capacitors required											
				LKT 4,8-480-EP Article-No. 31-10515	LKT 6-480-EP Article-No. 31-10514	LKT 8,33-525-EP Article-No. 31-10385	LKT 3,6-480-EP Article-No. 31-10531								
FDR: V_N = 690 V / 50 Hz															
88-02122	FDR 12,5-690-P1	12.5	3 x 22.1	3											
88-02120	FDR 20-690-P1	20.0	3 x 38.7	3			3								
88-01842	FDR 25-690-P1	25.0	3 x 50.0	3	3										
88-02257	FDR 50-690-P1	50.0	3 x 99.9			9									

Subject to technical changes / © FRAKO GmbH / www.frako.com

تسلاکالا
021-9102 6126 | teslakala.com

تسلاکالا
021-9102 6126 | teslakala.com

POWER QUALITY SOLUTIONS

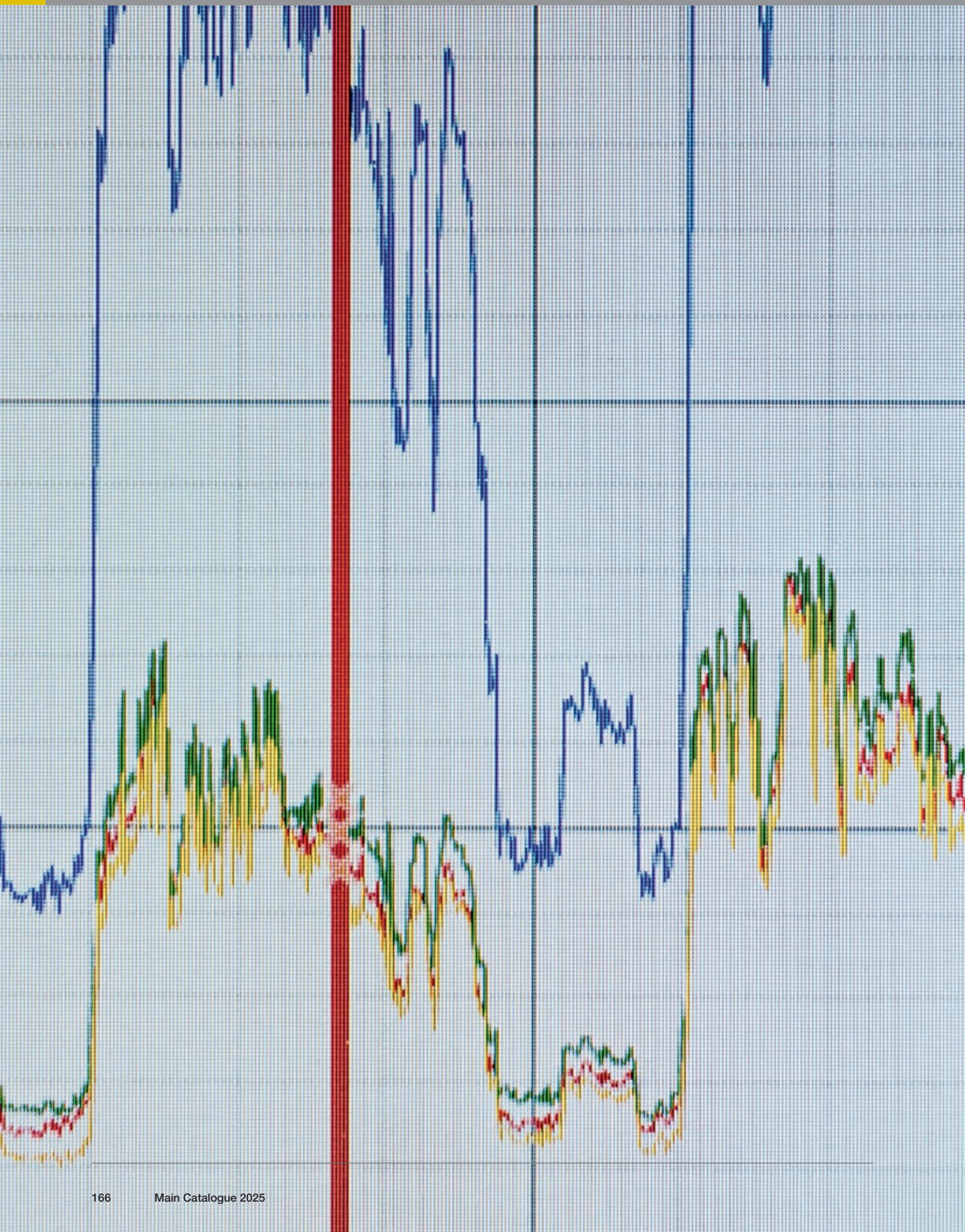

تسلاکالا
021-9102 6126 | teslakala.com

POWER QUALITY SOLUTIONS

Dynamic Power Factor Correction Systems

Page 168





1

Passive Harmonic Filters

Page 178



2

Active Filters

Page 182





3

تسلاکالا
021-9102 6126 | teslakala.com

1

Dynamic Power Factor Correction Systems

Dynamic Power Factor Correction Systems in sheet steel cabinets

Page 161

Dynamic Capacitor Modules – detuned

Page 165

Subject to technical changes / © FRAKO GmbH / www.frako.com

تسلاکالا
021-9102 6126 | teslakala.com



LSFC-E
Dynamic Power Factor Correction Systems in sheet steel cabinets

The SBS dynamic Power Factor Correction System from FRAKO switches without delay at the next voltage zero at the thyristor switch and thus avoids any peak inrush current. Wear-free switching. The solid-state switches function without any problems even when the capacitors are not discharged and without causing peak inrush currents.

Description
The FRAKO LSFC-E Dynamic Power Factor Correction System provides switching of the capacitor stages with complete elimination of contact wear and network perturbation.

With the RM 2012 fast-acting control relay systems of the LSFC–E series are used in low voltage networks:
- with low short-circuit capacities where disruptions occur when large consumers are switched on
- where a fast-acting Power Factor Correction System and a large number of switching cycles are necessary
- where Power Factor Correction is required for only a few supply cycles at a time

Power Range
LSFC-E: 100 to 300 kvar

Construction
Sheet steel cabinet with door and lifting lugs. Ventilation via air inlet filter in the cabinet door and electric fan. Modular construction combining up to three type C-E capacitor-reactor modules.
The components comprise:
- Self-healing LKT type power capacitors with low loss self-healing dielectric made from segmented metallised polypropylene film. Filled with a PCB-free filler. With discharge resistors, as per EN 60831-1 and -2 as well as IEC 60831-1 and -2
- Electronic switching assemblies designed for 100 % operating time
- Fuselinks, 3-pole, size NH00
- Busbar system
- Control terminal strip with control circuit fuse and thermal switch
- The basic units are equipped with an RM 9606 Reactive Power Control Relay with reaction times about 5 seconds. All systems can also be supplied with EMR 1100 S, EMR 1100 or RM 2012 Control Relays
- Fan, air inlet filter and temperature controller

تسلاکالا
021-9102 6126 | teslakala.com

Dynamic Power Factor Correction Systems

Dynamic Power Factor Correction Systems in sheet steel cabinets

- Low-loss Harmonic Filter Reactors with thermal trip switch for the following series resonance frequencies:

Version	Resonance frequency	Detuning factor	For mains with utility audio frequency [1]
P1	134 Hz	p = 14 %	≥ 166 Hz
P8	177 Hz	p = 8 %	≥ 217 Hz
P7	189 Hz	p = 7 %	≥ 228 Hz

[1] Utility company specifications inconsistent with the above must be taken into account.
In addition, also note version specifications given in our “Manual of Power Quality”.

Installation Site

The place of installation must comply with the requirements of the ingress protection and ambient temperature concerned.

Regulations

For installation and connection of Power Factor Correction Capacitors in Germany the following regulations must be complied with: VDE 0100, VDE 0105, VDE 0560 Part 46 and VDE 0106 Part 100 (German Association of Electrical Engineers). In other countries the equivalent local regulations must be followed.

Connection

The power supply cable enters the bottom of the cabinet through a sliding gland plate and a cable clamp rail, and is connected directly to the busbar system. The control cables are connected to the terminal strip provided for them.

System Expansion

The easy-to-maintain design simplifies the task of extending existing installations with less than three modules in one cabinet at a later date. It is also always possible to extend existing systems by installing an additional cabinet, type LSFCZ-E (extension unit without control relays).

Accessories / Options

- PFC-12TR-1 fast-acting Reactive Power Control Relay with reaction times of 20 to 40 ms (order code -500- or -501-; see chapter Power Factor Control Relays) instead of a PQC Relay
- LV HBC switch-disconnectors instead of LV HBC fuselinks for group overcurrent protection
- Customized colour to specified RAL standard
- Additional floor standing base (height: 100 or 200 mm), not fitted
- System installation in cabinet provided free issue by customer (types on request)

Technical Data

Enclosure	Sheet steel cabinet with internal fan at top, door right hinged
Rated voltage	400 V/50 Hz
Rated capacitor voltage	440 V / 50 Hz (-P8, -P7, -P5) 480 V / 50 Hz (-P1)
Ingress protection	IP20 or IP41 per EN 60529
Ambient temperature	–5 °C to +40 °C as per VDE 0660 Part 500
Relative humidity	Max. 90 %, no condensation
Discharge	With discharge resistors acc. to VDE 0560 Part 46
Cabinet colour	RAL 7035
Standards	EN 60831-1 and -2 IEC 60831-1 and -2 EN 61921 IEC 61921 EN 61439-1 and -2 IEC 61439-1 and 2

Important Notes

For further information on power factor correction and harmonics please refer to our “Manual of Power Quality”.

FRAKO systems are designed for connecting 5 core cables. If a 4-core cable is used, a jumper must be fitted to connect PE and N, or a control transformer must be installed.

Subject to technical changes / © FRAKO GmbH / www.frako.com

تسلاکالا
021-9102 6126 | teslakala.com

Dynamic Power Factor Correction Systems

Dynamic Power Factor Correction Systems in sheet steel cabinets

Version: P1 (Detuning factor p = 14 %)

Article-No.	Type	Rated power [kvar]	Stage power [kvar]	Switching sequence	Dimensions Width [mm]	Height [mm]	Depth [mm]	Weight (gross) approx. [kg]	Protection IP
Power Factor Correction Systems in sheet steel cabinets (width = 800 mm), rated mains voltage: 400 V / 50 Hz									
Type series: LSFC …-P1-E									
34-22804	LSFC 200-25-23-400-86-620-P1-E	200	25	1:1:2:2:2	800	2110	600	533	41
34-22805	LSFC 200-50-4-400-86-620-P1-E	200	50	1:1:1:1	800	2110	600	526	41
34-22806	LSFC 225-25-14-400-86-620-P1-E	225	25	1:2:2:2:2	800	2110	600	552	41
34-22807	LSFC 250-25-24-400-86-620-P1-E	250	25	1:1:2:2:2:2	800	2110	600	580	41
34-22808	LSFC 250-50-5-400-86-620-P1-E	250	50	1:1:1:1:1	800	2110	600	573	41
34-22809	LSFC 275-25-15-400-86-620-P1-E	275	25	1:2:2:2:2:2	800	2110	600	632	41
34-22810	LSFC 300-50-6-400-86-620-P1-E	300	50	1:1:1:1:1:1	800	2110	600	653	41
Power Factor Correction Systems, extension units in sheet steel cabinets (width = 800 mm), rated mains voltage: 400 V / 50 Hz									
Type series: LSFCZ …-P1-E									
34-16652	LSFCZ 100-50-2-400-86-P1-E	100	50	1:1	800	2110	600	246	41
34-16653	LSFCZ 150-50-3-400-86-P1-E	150	50	1:1:1	800	2110	600	442	41
34-16654	LSFCZ 200-50-4-400-86-P1-E	200	50	1:1:1:1	800	2110	600	508	41
34-16655	LSFCZ 250-50-5-400-86-P1-E	250	50	1:1:1:1:1	800	2110	600	548	41
34-16656	LSFCZ 300-50-6-400-86-P1-E	300	50	1:1:1:1:1:1	800	2110	600	628	41

Other rated voltages, frequencies and power ratings on request

Recommended supply lead cross sections: please refer to the technical annex (page 137 ff.)

Version: P7 (Detuning factor p = 7 %)

Article-No.	Type	Rated power [kvar]	Stage power [kvar]	Switching sequence	Dimensions Width [mm]	Height [mm]	Depth [mm]	Weight (gross) approx. [kg]	Protection IP
Power Factor Correction Systems in sheet steel cabinets (width = 800 mm), rated mains voltage: 400 V / 50 Hz									
Type series: LSFC …-P7-E									
34-22811	LSFC 200-25-23-400-85-620-P7-E	200	25	1:1:2:2:2	800	2000	500	*	20
34-22812	LSFC 200-50-4-400-85-620-P7-E	200	50	1:1:1:1	800	2000	500	*	20
34-22813	LSFC 225-25-14-400-85-620-P7-E	225	25	1:2:2:2:2	800	2000	500	*	20
34-22814	LSFC 250-25-24-400-85-620-P7-E	250	25	1:1:2:2:2:2	800	2000	500	*	20
34-22815	LSFC 250-50-5-400-85-620-P7-E	250	50	1:1:1:1:1	800	2000	500	*	20
34-22816	LSFC 275-25-15-400-85-620-P7-E	275	25	1:2:2:2:2:2	800	2000	500	*	20
34-22817	LSFC 300-50-6-400-85-620-P7-E	300	50	1:1:1:1:1:1	800	2000	500	*	20
Power Factor Correction Systems, extension units in sheet steel cabinets (width = 600 mm), rated mains voltage: 400 V / 50 Hz									
Type series: LSFCZ …-P7-E									
34-16244	LSFCZ 100-50-2-400-85-P7-E	100	50	1:1	800	2000	500	*	20
34-16245	LSFCZ 150-50-3-400-85-P7-E	150	50	1:1:1	800	2000	500	*	20
34-16246	LSFCZ 200-50-4-400-85-P7-E	200	50	1:1:1:1	800	2000	500	*	20
34-16247	LSFCZ 250-50-5-400-85-P7-E	250	50	1:1:1:1:1	800	2000	500	*	20
34-16248	LSFCZ 300-50-6-400-85-P7-E	300	50	1:1:1:1:1:1	800	2000	500	*	20

Other rated voltages, frequencies and power ratings on request

Recommended supply lead cross sections: please refer to the technical annex (page 137 ff.)

* on request

For options and accessory equipment for PFC Systems, module rails, ordering examples and dimensional drawings see page 87 ff.

تسلاکالا
021-9102 6126 | teslakala.com

Dimensions

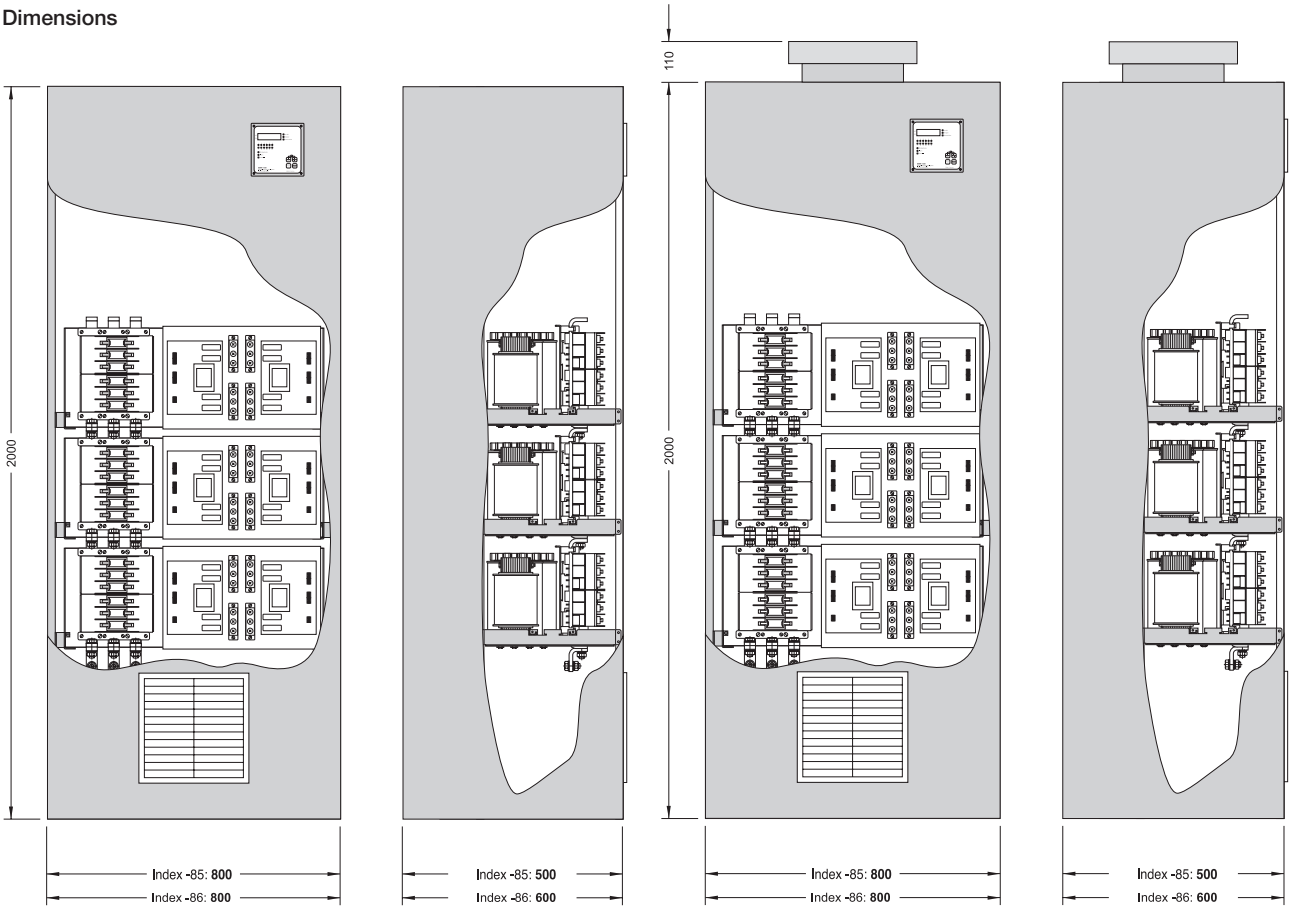

Dimensional drawing LSFC-E (100 to 300 kvar)

All dimensions in mm

Subject to technical changes / © FRAKO GmbH / www.frako.com

تسلاکالا
021-9102 6126 | teslakala.com

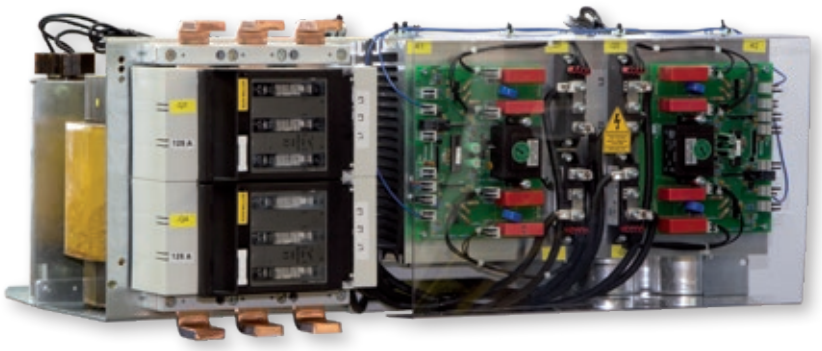

C84D-P-E / C85D-P-E / C86D-P-E
Dynamic Capacitor Modules – detuned

FRAKO's dynamic Capacitor Modules are suitable for installation in standard switchgear systems. Avoiding of inrush current peaks through instantaneous zero-cross switching – therefore free of wear switching even when capacitors are not discharged.

- Power Range: 25 to 100 kvar per module
- Compact design - up to 300 kvar per cabinet
- Ideal for mounting in all common switchgear systems
- Easy and quick mounting with multifunctional rails
- Power Factor Correction Capacitors LKT dry-type with four safety features

Application Recommendations

Capacitor modules type C84D-P-E, C85D-P-E and C86D-P-E are suitable for installation in standard switchgear systems. Additional mounting rails for all common switchgear systems:

- W = 800 mm, T = 400, 500, 600 mm

allow an easy and quick installation of complex Power Factor Correction Systems.

Suitable for supply networks with harmonic distortion according to EN 61000-2-4 class 2.

Available in the following versions:

Version	Detuning factor	Resonance frequency
P1	p = 14 %	134 Hz
P5	p = 5.67 %	210 Hz
P7	p = 7 %	189 Hz
P8	p = 8 %	177 Hz

تسلاکالا
021-9102 6126 | teslakala.com

Dynamic Power Factor Correction Systems

Dynamic Capacitor Modules – detuned

Power Range

Compact compensation module ideal for mounting in switchgear systems:

- 25 to 100 kvar

Construction

Sheet steel chassis with mounted power capacitors, electronic switches for 100 % duty cycle and fuses - ideal for mounting in all common switchgear systems.

The module consists of:

- Self-healing LKT type power capacitors with low-loss self-healing dielectric made from segmented metallised polypropylene film. Filled with a PCB-free filler. With discharge resistors, as per EN 60831-1 and -2 as well as IEC 60831-1 and -2
- With electronic switches for 100 % duty cycle
- Low-loss Harmonic Filter Reactors with temperature switches
- Busbar system with bus-mounting fuse base, 3-pole, size NH 00
- Control circuit with female connector (wired connector for connection with terminal strip incl.)

Installation Site

The place of installation must comply with the requirements of the ingress protection and ambient temperature concerned.

Regulations

For installation and connection of Power Factor Correction Capacitors in Germany the following regulations must be complied with: VDE 0100, VDE 0105, VDE 0560 Part 46 and VDE 0106 Part 100 (German Association of Electrical Engineers). In other countries the equivalent local regulations must be followed.

Installation

Specific module rails are required for installation in the switchgear system. Those module rails are available for all common switchgear systems and can be supplied as an optional accessory.

Connection

The network connection can be done either vertically or horizontally. For the horizontal connection one has to connect the cables equipped with the cable lugs to the busbar by using the M12 screws.

A bus connection bracket CU AW-1 for vertical connection is available as an option.

Additional modules can be connected directly via the busbar system.

Technical Data

Design	Sheet steel chassis for installation in switchgear cabinets C6xD… for cabinets (width = 600 mm) C8xD… for cabinets (width = 800 mm)
Rated voltage	400 V/50 Hz
Rated voltage of capacitors	440 V/50 Hz (-P5 to -P8) 480 V/50 Hz (-P1)
Ambient temperature	–5 °C to +60 °C
Humidity	Max. 90 %, no condensation
Standards	EN 60831-1 and -2 IEC 60831-1 and -2 EN 61921 IEC 61921 EN 61439-1 and -2 IEC 61439-1 and 2

Important Notes

For further information on power factor correction and harmonics please refer to our “Manual of Power Quality”.

Subject to technical changes / © FRAKO GmbH / www.frako.com

تسلاکالا
021-9102 6126 | teslakala.com

Version: P1 (Detuning factor p = 14 %)

Article-No.	Type	Rated power [kvar]	Step power [kvar]	Switching sequence	Dimensions Width [mm]	Height [mm]	Depth [mm]	Weight (gross) approx. [kg]	Protection IP
Capacitor Modules for installation in switchgear systems with a width of 800 mm, rated mains voltage: 400 V / 50 Hz Type series: C8xD …-P1-E									
34-64857	C84D 25-25-1-400/480-84-P1-E	25	25	1	700	300	350	58	00
34-65016	C85D 37,5-12,5-11-400/480-85- P1-E	37.5	12.5	1:2	700	300	450	*	00
34-65015	C85D 50-25-2-400/480-85-P1-E	50	25	1:1	700	300	450	*	00
34-64886	C84D 50-50-1-400/480-84-P1-E	50	50	1	700	300	350	*	00
34-64376	C85D 75-25-11-400/480-85-P1-E	75	25	1:2	700	300	450	*	00
34-65012	C86D 100-50-2-400/480-86-P1-E	100	50	1:1	700	300	550	*	00

Other rated voltages, frequencies and power ratings on request
Recommended supply lead cross sections: please refer to the technical annex (page 137 ff.)

Version: P7 (Detuning factor p = 7 %)

Article-No.	Type	Rated power [kvar]	Step power [kvar]	Switching sequence	Dimensions Width [mm]	Height [mm]	Depth [mm]	Weight (gross) approx. [kg]	Protection IP
Capacitor Modules for installation in switchgear systems with a width of 800 mm, rated mains voltage: 400 V / 50 Hz Type series: C6xD …-P7-E									
34-64028	C84D 25-25-1-400/440-84-P7-E	25	25	1	700	300	350	*	00
34-64061	C84D 37,5-12,5-11-400/440-84-P7-E	37.5	12.5	1:2	700	300	350	*	00
34-64029	C84D 50-25-2-400/440-84-P7-E	50	25	1:1	700	300	350	*	00
34-64030	C84D 50-50-1-400/440-84-P7-E	50	50	1	700	300	350	*	00
34-64031	C85D 75-25-11-400/440-85-P7-E	75	25	1:2	700	300	450	*	00
34-64032	C85D 100-50-2-400/440-85-P7-E	100	50	1:1	700	300	450	97	00

Other rated voltages, frequencies and power ratings on request
Recommended supply lead cross sections: please refer to the technical annex (page 137 ff.)
* on request

For options and accessory equipment for PFC Systems on mounting plates and ordering examples see page 87 ff.

تسلاکالا
021-9102 6126 | teslakala.com

POWER QUALITY SOLUTIONS

Modern Networks

Modern power electronics and converters make significant contributions to the economical application of electrical energy and the automation and digitalization of processes in various industrial sectors. The high number and continuous increase in the use of converters (PV inverters, frequency converters, etc.) leads to disturbances in power quality in the supply network. The harmonics generated by modern converters are often responsible for voltage distortion - in other words, poor power quality.
At the same time, the short-circuit power of the networks is decreasing, mainly due to the increasing number of decentralized feed-ins. However, the number of consumers sensitive to deviations in network voltage is increasing. Since all consumers in the supply network are interconnected, this can lead to malfunctions and operational failures.

Harmonics

Harmonics are among the current problems caused by converter-related network feedback and reduce the quality of the voltage.

Quality

Quality assurance of the supply voltage must be guaranteed so that no impairments or failures occur in industry, the public supply network, and households. The standards and guidelines of individual countries dictate these requirements and must be adhered to.

POWER QUALITY SOLUTIONS

The impacts and their remedies vary significantly and must be considered separately. There are passive filter solutions and active filter solutions. A power quality measurement to analyze the existing conditions is often essential. FRAKO is available to assist you in PQ measurements using measuring instruments, aiding in assessment and exploring optimal solutions.

Passive Filter Systems

A passive filter system is tuned to a specific frequency (harmonic) and is therefore low impedance at a specific frequency. That is, the passive filter has low resistance at that frequency. When the specific frequency occurs in the network, the passive filter absorbs it because it is low impedance for that frequency. The harmonic (e.g., H5 - fr = 250 Hz) flows into the passive filter and “disappears” there. This prevents consumers from being disturbed by harmonics.

Active Filter Systems

FRAKO’s active filters combine many advantages, extremely short response times, and selective control up to the 50th harmonic. Without magnitude and phase errors, these are recognized as top-class filters. Compensation level and control dynamics can be ideally adapted to local conditions. In addition to harmonic compensation, they are also suitable for extremely fast regulation of fundamental reactive power and load balancing. This can also reduce flicker levels in the network.

Subject to technical changes / © FRAKO GmbH / www.frako.com

تسلاکالا
021-9102 6126 | teslakala.com

Operating principle of Active and Passive harmonic filters

Active Filter

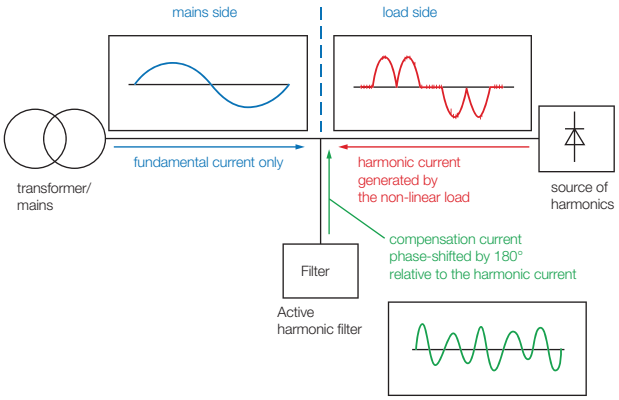

Passive Filter

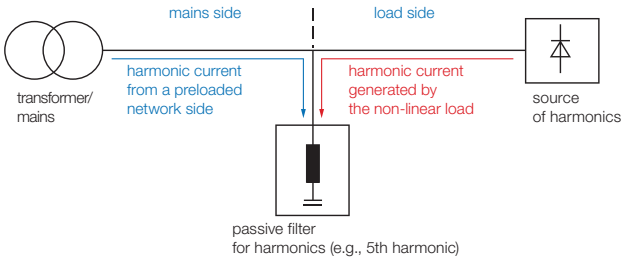

Comparison of the advantages and disadvantages of active and passive harmonic filter solutions

	active filter	passive filter	Passive Filter Impedance Control
Losses	high	low	
Overload capacity	Cannot be overloaded	External shutdown required	Control of the filter current until shutdown
Filtering on load and mains side	no	yes	
Broadband filtering	Currently up to the 50th harmonic	yes	
Filtering of sub- and intraharmonics	no	yes	
Compensate for multiple orders simultaneously	Can filter different harmonics	Separate modules	
Impact on fundamental frequency	no	yes, capacitive	
Installation effort	Current-controlled Active Filters: External current transformers to supply current as the controlled variable	Low, no external current transformers needed	

تسلاکالا
021-9102 6126 | teslakala.com

Passive Harmonic Filters

2

Passive Harmonic Filters in sheet steel cabinets

Page 179

Subject to technical changes / © FRAKO GmbH / www.frako.com

تسلاکالا
021-9102 6126 | teslakala.com





LSFC-P4

Passive Harmonic Filters in sheet steel cabinets

Passive Harmonic Filters in sheet steel cabinets for low voltage networks heavily contaminated with harmonics. Filter circuits with intelligent control systems are a reliable means of reducing current and voltage harmonics and offer an excellent cost-benefit ratio.

Passive Harmonic Filters for low voltage networks heavily contaminated with harmonics but needing relatively little reactive power.

- Power range up to 460 A_{rms} per cabinet unit
- Modular construction in freestanding sheet steel cabinet
- LKT power capacitors with dry design and fourfold safety features
- Highly linear filter reactors
- Tuning frequency (detuning factor) individually adjustable for specific network
- Control and self-monitoring system individually configurable via harmonic voltage and filter current, making measurement by external current transformer unnecessary
- Permanent network monitoring by continuous network analysis
- Complete system ready to install

Passive Harmonic Filters (adjusted detuning factor):

- Installation where harmonic levels are ‘high’ (as per EN 61000-2-4, Class 3 or higher) but
- Reactive power demand is low
- The filter is controlled by voltage harmonics
- The filter current is monitored

تسلاکالا
021-9102 6126 | teslakala.com

Passive Harmonic Filters

Passive Harmonic Filters in sheet steel cabinets

Design and operating principle:

The passive harmonic filter is a voltage controlled filter circuit consisting of premium power capacitors and highly linear harmonic filter reactors. The individual filter circuit stages are matched to the respective network conditions with the utmost care.

The system includes the following components:

- Self-healing LKT-type power capacitors with low-loss dielectric – made from segmented metallised polypropylene film – overpressure disconnection, solder-free design and PCB-free filler material;
- LKT series with discharge resistors to EN 60831-1 and -2 / IEC 60831-1 and -2
- Heavy duty capacitor contactors with precharging contacts
- Highly linear harmonic filter reactors with temperature monitoring
- Control terminal strip with control circuit fuse and thermal trip contact
- PQA-C
- Thermostat-controlled electric cooling fan

The capacitor stages are switched on or off by the control unit according to appropriate voltage parameters, such as:

- The levels of individual harmonics or
- The THDv (geometric sum of all voltage harmonics)

The control unit is also able to monitor the network for compliance with the relevant power quality standards and send an alarm signal if the monitored parameters go beyond set limits!

The heart of every passive harmonic filter from FRAKO is the PQA-C. It is the ideal combination of measuring device (i. e. Power Quality Analyzer) and control device (controller). The PQA-C continues the efficient further development of the control functions of the proven EM-PQ 2300 device.

During development, the focus was placed on the control of passive harmonic filters of the LSFC-PX series from FRAKO. Advanced automatic control of filter performance, depending on volatile environmental variables, was given special consideration.
Here, the PQA-C can make optimal use of its strengths, in which the analyzed power quality measurement data (voltages, currents) as well as information from the environment (temperatures and digital inputs) are directly implemented switching commands for the intended outputs by means of intelligent software in the device.
All relevant information about the operating status can be seen directly on the device or accessed via the integrated web server.
Integration into the Industry 4.0 infrastructure is provided by state-of-the-art interfaces (Modbus TCP, REST).
Commissioning and parameterization of the PQA-C is clear and simple - with complete flexibility of settings. Parameters can be set directly on the device or remotely via a web server.

Options:

- Power capacitors with up to 909 V overvoltage capacity (continuous)
- Design with modules tuned for several different harmonics — with interlock circuit and monitoring for reliable operation of the complete system
- Compensation circuits for the identification and monitoring of unbalances
- Automatic resonance detuning
- Installation possible in a wide variety of cabinet systems

Subject to technical changes / © FRAKO GmbH / www.frako.com

تسلاکالا
021-9102 6126 | teslakala.com

Dimensions

Front view exterior

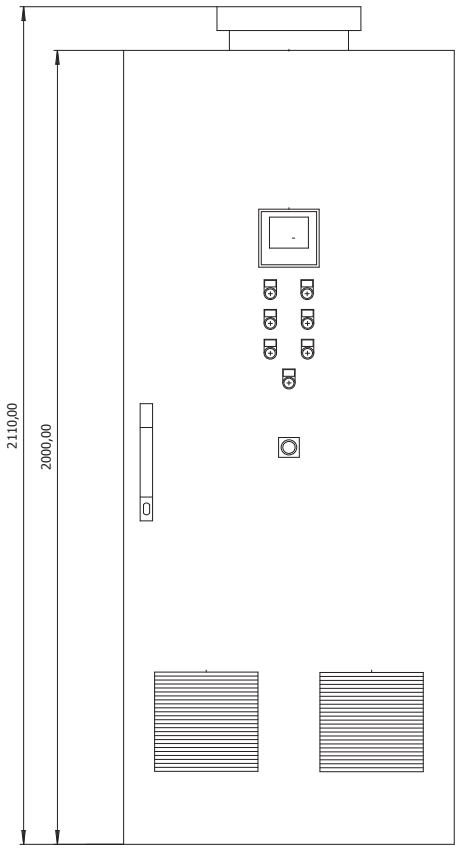

Front view interior

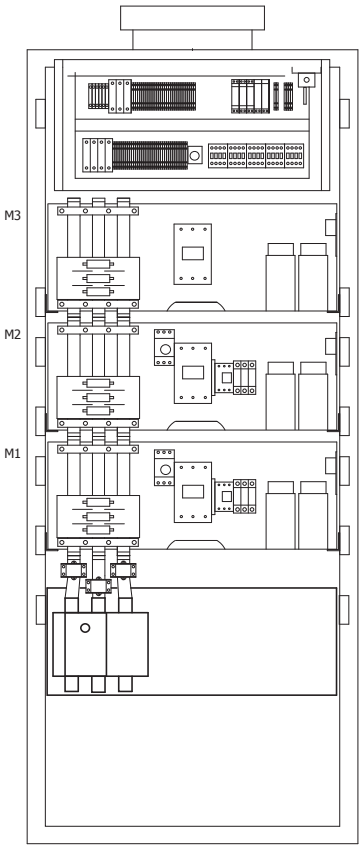

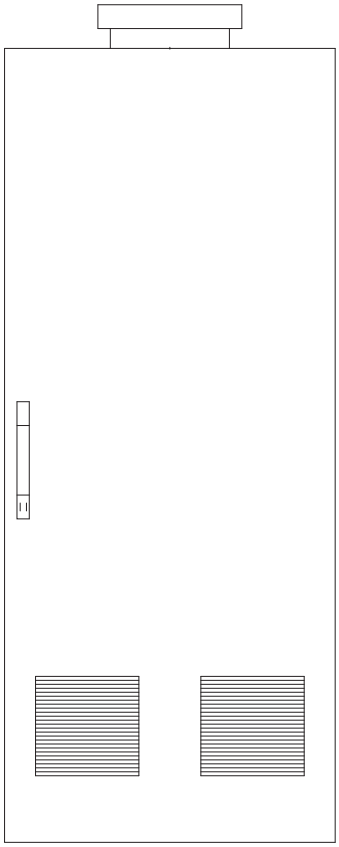

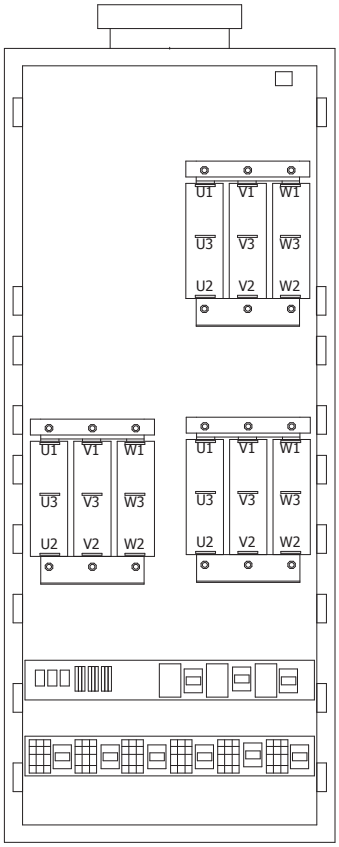

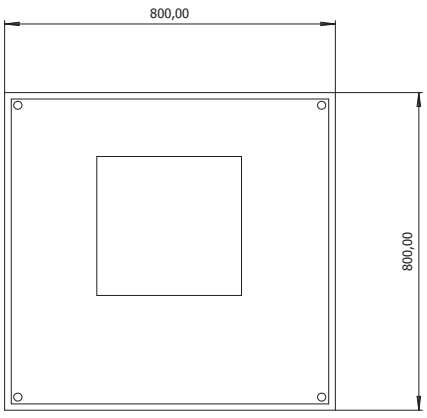

All dimensions in mm

تسلاکالا
021-9102 6126 | teslakala.com

Active Filters

OSFS

Page 183

Subject to technical changes / © FRAKO GmbH / www.frako.com

تسلاکالا
021-9102 6126 | teslakala.com



OSFS
Active Filters

OSFS – The highly dynamic Active Filter
OSFS units encompass a broad range of state-of-the-art Active Filters with a web server function. The product range is characterized in particular by its variety of options for high-power applications plus a large selection of 690 V units and a special filter.

The OSFS range

– **F** **Fixed-rating unit:**
For wall mounting

– **M2** **Modular unit:**
In freestanding cabinet with up to 3 modules per cabinet

– **UL** UL certificate

— **3** **3-wire:**
For compensating three phases without a neutral conductor

— **4** **4-wire:**
For compensating three phases and the neutral conductor

– **V2** **Voltage Controlled:**
voltage controlled Active Filter

تسلاکالا
021-9102 6126 | teslakala.com

Technical Data

OSFS-F (3-wire fixed-rating unit), 400 V

Type	OSFS 30-400-3-F
Article-No.	39-22441
Power rating	21 kVA
Compensating current per phase at 50/60 Hz	30 A_{rms}
System voltage	400 V ± 10 %
Nominal frequency	50/60 Hz ± 5 %
Number of phases	3
Phase connections	3 phases without neutral conductor (TN, TT)
Harmonics compensation	Individually up to the 49th order
Degree of compensation	> 98 %
Correction of power factor cos φ	Up to 1.0
Parallel operation	OSFS Filters can be operated in parallel
Response time	< 1 ms
Power loss	< 1 000 W
Maximum air flow requirements	400 m^3/h
Noise level	< 70 dB (A)
Ambient conditions	0 up to 95 % relative humidity, non-condensing, max. altitude: 1000 m above sea level
Operating temperature ambient	0 to 50 °C, derating exceeding 40 °C
Dimensions (W x H x D) [mm]	231 x 1 060 x 311
Weight [kg]	50
Cabinet colour	RAL 7035 (light grey), RAL 5017 (traffic blue)
Type of protection	IP20, IP21 according to IEC 529, other ratings upon request
Environmental conditions	chemical 3C2, mechanical 3S2
Electromagnetic compatibility (EMC)	EN55011, Class B
Certificates	CE, UKCA
Interfaces	Web server, Ethernet (Modbus TCP)

The units can be installed in parallel and are available as standard versions from 208 V to 480 V.
Other voltages, interfaces and IP-classes on request.

Connection diagram (example)

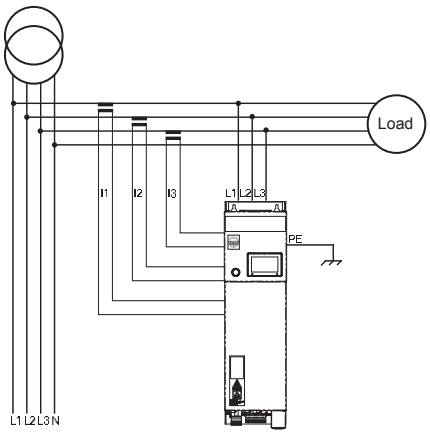

Dimensions

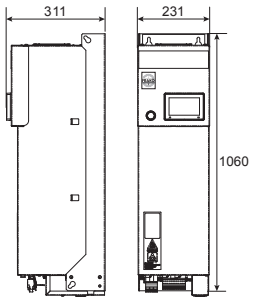

All dimensions in mm

Subject to technical changes / © FRAKO GmbH / www.frako.com

تسلاکالا
021-9102 6126 | teslakala.com

Technical Data

OSFS-F (3-wire fixed-rating unit), 400 V and 690 V

Type	OSFS 50-400-3-F	OSFS 75-400-3-F	OSFS 90-400-3-F	OSFS 120-400-3-F	OSFS 150-400-3-F	OSFS 90-690-3-F
Article-No.	39-22442	39-22402	39-22400	39-22403	39-22443	39-22444
Power rating	35 kVA	52 kVA	62 kVA	83 kVA	104 kVA	108 kVA
Compensating current per phase at 50/60 Hz	50 A_{rms}	75 A_{rms}	90 A_{rms}	120 A_{rms}	150 A_{rms}	90 A_{rms}
System voltage	400 V ± 10 %					690 V ± 10 %
Nominal frequency	50/60 Hz ± 5 %					
Number of phases	3					
Phase connections	3 phases without neutral conductor (TN, TT, IT)					
Harmonics compensation	Individually up to the 49th harmonic					
Degree of compensation	> 98 %					
Correction of power factor cos φ	Up to 1.0					
Parallel operation	OSFS Filters can be operated in parallel					
Response time	< 1 ms					
Power loss	< 1 600 W	< 2 535 W	< 3 180 W	< 3 155 W	< 3 225 W	< 2 969 W
Maximum air flow requirements	600 m^3/h					
Noise level	< 70 dB (A)					
Ambient conditions	0 up to 95 % relative humidity, non-condensing, max. altitude: 1000 m above sea level					
Operating temperature ambient	0 to 50 °C, up to 40 °C without derating					
Dimensions (W x H x D) [mm]	231 x 2 040 x 470					
Weight [kg]	91	91	91	105	116	150
Cabinet colour	RAL 7035 (light grey), RAL 5017 (traffic blue)					
Type of protection	IP 20 according to IEC 529					
Environmental conditions	Class 3C3 (chemical), class 3S3 (mechanical)					
Electromagnetic compatibility (EMC)	EN 55011, class B					
Certificates	CE, ABS, DNV GL, UKCA					
Interfaces	Web server, Ethernet (Modbus TCP)					

The units can be installed in parallel and are available as standard versions from 208 V to 480 V resp. 480 V to 690 V.
Other voltages, interfaces and IP-classes on request.

Connection diagram (example)

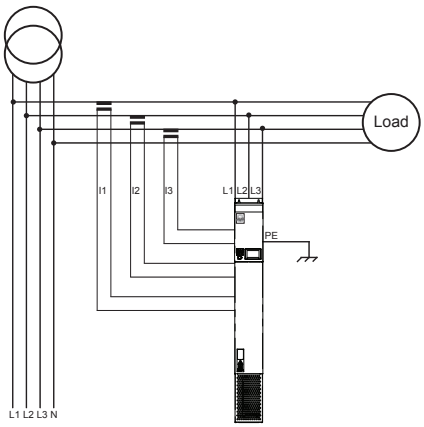

Dimensions

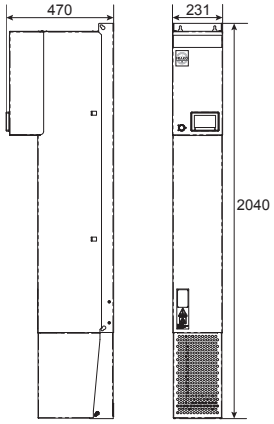

All dimensions in mm

تسلاکالا
021-9102 6126 | teslakala.com

Technical Data

OSFS-F (4-wire fixed rating unit), 400 V

Type	OSFS 100-400-4-F
Article-No.	39-22429
Power Rating	70 kVA
Compensating current at 50/60 Hz	phase current 100 A_{rms} / neutral current 300 A_{rms}
System voltage	400 V ± 10 %
Nominal frequency	50/60 Hz ± 2 %
Number of phases	3
Phase connections	3 phases with neutral conductor (TN,TT,IT)
Harmonics compensation	individual compensation up to 49th order
Degree of compensation	> 98 %
Correction of power factor cos ϕ	Up to 1.0
Upgradeability	OSFS Active Filters can be operated in parallel
Response time	< 1 msec
Power loss	< 2235 W
Maximum air flow requirements	600 m³/h
Noise level	< 70 dB (A)
Ambient conditions	0 up to 95 % relative humidity, non-condensing, max. altitude: 1000 m above sea level
Operating temperature ambient	0 to 50 °C, derating exceeding 40 °C
Dimensions (W x H x D) [mm]	231 x 1 650 x 487
Weight [kg]	90
Cabinet colour	RAL 7035 (light grey), RAL 5017 (traffic blue)
Type of protection	IP20 nach IEC 529
Environmental conditions	Class 3C2 (chemical), class 3S2 (mechanical)
Electromagnetic compatibility (EMV)	EN 55011, class B
Certificates	CE, UKCA
Interfaces	Web server, Ethernet (Modbus TCP)

The units can be installed in parallel and are available as standard versions from 208 – 415 V. Other voltages, interfaces and IP-classes on request.

Connection diagram (example)

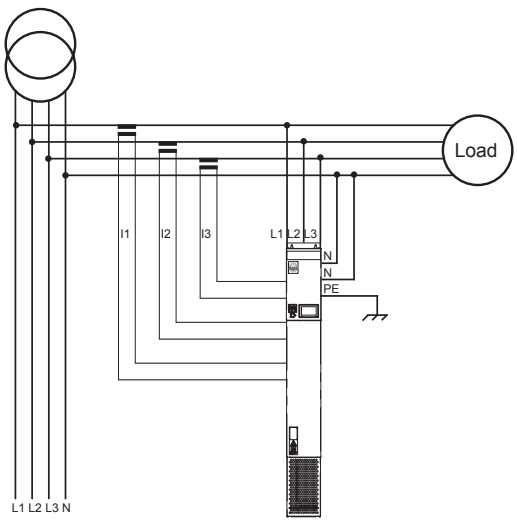

Dimensions

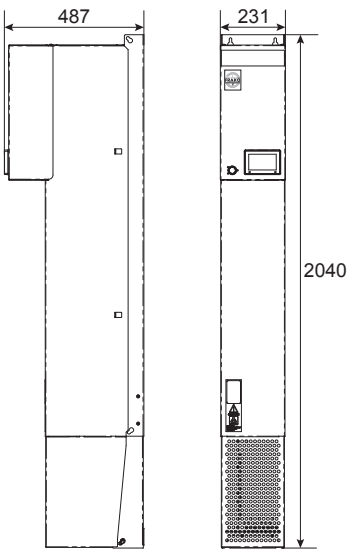

All dimensions in mm

Subject to technical changes / © FRAKO GmbH / www.frako.com

تسلاکالا
021-9102 6126 | teslakala.com

Active Filters

OSFS

The OSFS-V2 voltage-controlled active filter

The OSFS-V2 is an active filter for the compensation of harmonics in the range of 50 Hz - 5 kHz (up to the 100th harmonic). The world's fastest dynamic active filter offers resonance detection and suppression. It works either with current transformers or it can be operated voltage controlled without current transformers. This makes installation in existing networks considerably easier.

Features:

- High-speed active filter (response time < 20 µs).
- Reduces interharmonics
- 50 Hz – 5 kHz bandwidth
- Voltage and current compensation
- Advanced digital control
- Easy installation
- Insensitive to mains changes
- Harmonic compensation
- Resonance suppression
- Harmonic compensation possible without current transformer
- Not overloadable
- Available in 208 V – 480 V



All dimensions in mm

تسلاکالا
021-9102 6126 | teslakala.com

Technical Data

OSFS-V2 (3-wire fixed rating unit), 400 V

Type	OSFS 120-400-3-V2-F
Article-No.	39-22438
Power Rating	83 kVA
Compensating current at 50/60 Hz	120 A_{eff}
System voltage	400 V ± 10 %
Nominal frequency	50/60 Hz ± 2 %
Number of phases	3
Phase connections	3 phases without neutral conductor (TN,TT, IT)
Harmonics compensation	Compensation curve for harmonics and interharmonics up to 5 kHz (100th order)
Degree of compensation	> 97 %
Correction of power factor cos ϕ	Up to 1.0
Upgradeability	OSFS Active Filters can be used in parallel
Response time	< 20 µs
Power loss	< 1 200 W
Maximum air flow requirements	600 m³/h
Noise level	< 70 dB(A)
Ambient conditions	0 up to 95 % relative humidity, non-condensing, max. altitude: 1000 m above sea level
Operating temperature ambient	0 up to 50 °C, up to 40 °C with derating
Dimensions (W x H x D) [mm]	231 x 1653 x 482
Weight [kg]	90
Cabinet colour	Cabinet: RAL 7035 (grey), Base: RAL 7022 (dark grey)
Type of protection	IP20 to IEC 529
Environmental conditions	Class 3C3 (chemical), class 3S3 (mechanical)
Electromagnetic compatibility (EMV)	EN 55011, Class B
Certificates	CE, UKCA
Interfaces	Web server, Ethernet (Modbus TCP)

The units can be installed in parallel and are available as standard versions from 208 - 480 V. Other voltages, interfaces and IP-classes on request.

Connection diagram (example)

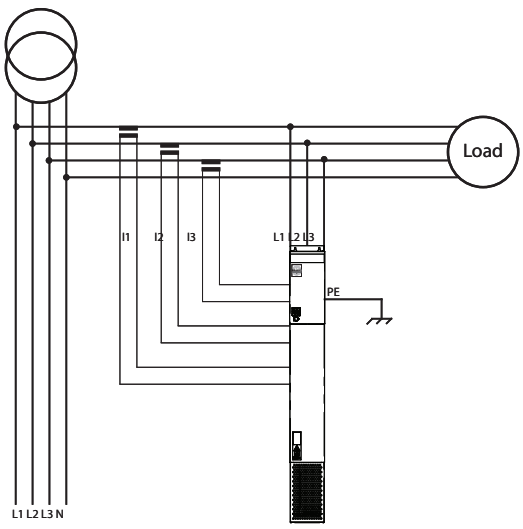

Dimensions

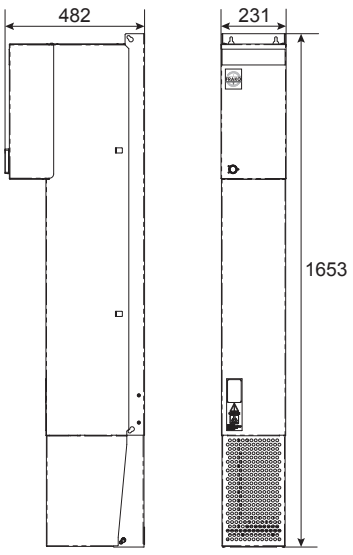

All dimensions in mm

Subject to technical changes / © FRAKO GmbH / www.frako.com

تسلاکالا
021-9102 6126 | teslakala.com

Active Filter OSFS-M2 in freestanding cabinet

Modern medical equipment, the latest LED technology and present-day motor control systems make the most exacting demands on power supply quality. Certain loads, however, greatly distort the supply-side waveform by generating harmonics. This situation often calls for an improvement in power quality. With the FRAKO Modular Active Filter, the distortion caused by individual loads, groups of consumers or the entire electrical installation is reduced to a tolerable level or totally eliminated from the network.

Clear benefits:

- 8 versions enable optimum adaption to the compensation requirement: 75 A, 100 A, 125 A,150 A, 200 A, 250 A, 300 A, 375 A
- Modular construction with only one control unit
- User-friendly touchscreen
- User-friendly remote service
- Current-controlled
- New: optionally also available voltage-controlled, if on site there is no space for current transformers
- Voltage range: 208 V – 480 V and 690 V



تسلاکالا
021-9102 6126 | teslakala.com

Technical Data

OSFS-M2 (3-wire modular unit), 400 V

Type	OSFS 75-400-3-M2	OSFS 100-400-3-M2	OSFS 125-400-3-M2	OSFS 150-400-3-M2	OSFS 200-400-3-M2	OSFS 250-400-3-M2	OSFS 300-400-3-M2	OSFS 375-400-3-M2
Article-No.	39-22480	39-22481	39-22464	39-22472	39-22483	39-22465	39-22475	39-22466
Power rating	52 kVA	69 kVA	87 kVA	104 kVA	139 kVA	173 kVA	208 kVA	260 kVA
Compensating current per phase at 50/60 Hz	70 A_{eff}	100 A_{eff}	125 A_{eff}	150 A_{eff}	200 A_{eff}	250 A_{eff}	300 A_{eff}	375 A_{eff}
System voltage	400 V ± 10 %							
Nominal frequency	50/60 Hz ± 2 %							
Number of phases	3							
Phase connections	3 phases without neutral conductor (TN, TT, IT)							
Harmonics compensation	Individually up to the 49th harmonic							
Degree of compensation	> 98 %							
Correction of power factor cos φ	Up to 1.0							
Parallel operation	OSFS-M2 Active Filters can be operated in parallel							
Response time	< 1 ms							
Power loss	< 2 760 W	< 2 810 W	< 2 825 W	< 3 225 W	< 5 425 W	< 5 650 W	< 6 250 W	< 7 925 W
Maximum air flow requirements	600 m³/h	600 m³/h	600 m³/h	800 m³/h	1 200 m³/h	1 200 m³/h	1 600 m³/h	1 800 m³/h
Noise level	< 70 dB (A)							
Ambient conditions	0 up to 95 % relative humidity, non-condensing, max. altitude: 1000 m above sea level							
Operating temperature ambient	0 to 50 °C, up to 40 °C without derating							
Dimensions (W x H x D) [mm]	800 x 2155 x 610							
Weight [kg]	335	335	335	351	472	472	495	609
Cabinet colour	Cabinet: RAL 7035 (grey), Base*: RAL 7022 (dark grey)							
Type of protection	IP 21 according to IEC 529							
Environmental conditions	Class 3C3 (chemical), class 3S3 (mechanical)							
Electromagnetic compatibility (EMC)	EN55011, class A; EN55011, class B							
Certificates	CE, DNV GL, UKCA							
Interfaces	Web server, Ethernet (Modbus TCP)							

The units can be installed in parallel and are available as standard versions from 208 V to 480 V.
Other voltages, interfaces and IP-classes on request. *base can be ordered separately

Connection diagram (example)

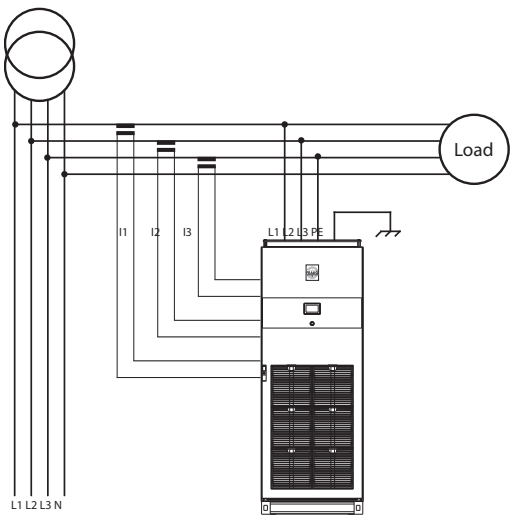

Dimensions

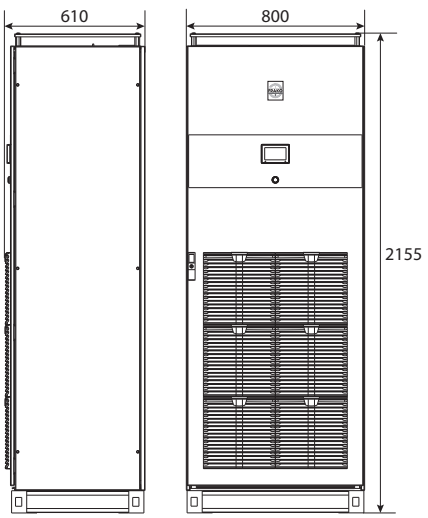

All dimensions in mm

Subject to technical changes / © FRAKO GmbH / www.frako.com

تسلاکالا
021-9102 6126 | teslakala.com

Technical Data

OSFS-M2 (3-wire modular unit), 690 V

Type	OSFS 90-690-3-M2	OSFS 180-690-3-M2	OSFS 270-690-3-M2
Article-No.	39-22476	39-22477	39-22478
Power rating	108 kVA	215 kVA	323 kVA
Compensating current per phase at 50/60 Hz	90 A_{rms}	180 A_{rms}	270 A_{rms}
System voltage	690 V ± 10 %		
Nominal frequency	50/60 Hz ± 2 %		
Number of phases	3		
Phase connections	3 phases without neutral conductor (TN, TT, IT)		
Harmonics compensation	Individually up to the 49th harmonic		
Degree of compensation	> 98 %		
Correction of power factor cos φ	Up to 1.0		
Parallel operation	OSFS-M Active Filters can be operated in parallel		
Response time	< 1 ms		
Power loss	< 2969 W	< 5813 W	< 8657 W
Maximum air flow requirements	600 m³/h	1200 m³/h	1800 m³/h
Noise level	< 70 dB (A)		
Ambient conditions	0 up to 95 % relative humidity, non-condensing, max. altitude: 1000 m above sea level		
Operating temperature ambient	0 to 50 °C, up to 40 °C without derating		
Dimensions (W x H x D) [mm]	800 x 2155 x 610		
Weight [kg]	351	495	639
Cabinet colour	Cabinet: RAL 7035 (grey), Base*: RAL 7022 (dark grey)		
Type of protection	IP 21 according to IEC 529		
Environmental conditions	Class 3C3 (chemical), class 3S3 (mechanical)		
Electromagnetic compatibility (EMC)	EN 55011, class B / EN 55011, class A		
Certificates	CE, DNV GL, UKCA		
Interfaces	Web server, Ethernet (Modbus TCP)		

The units can be installed in parallel and are available as standard versions from 480 V to 690 V.
Other voltages, interfaces and IP-classes on request. *base can be ordered separately

Connection diagram (example)

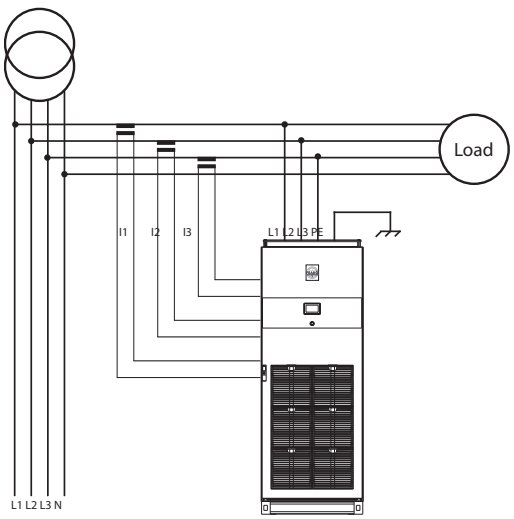

Dimensions

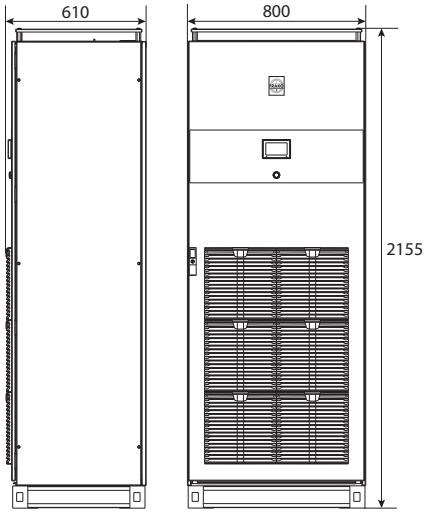

All dimensions in mm

تسلاکالا
021-9102 6126 | teslakala.com

Active Filters

OSFS

Technical Data

OSFS-UL (3-wire modular device, UL), 480 V

Type	OSFS 110-480-3-UL	OSFS 220-480-3-UL	OSFS 330-480-3-UL
Article-No.	39-22423	39-22424	39-22425
Power rating	76 kVA	152 kVA	229 kVA
Compensating current per phase at 50/60 Hz	110 A_{rms}	220 A_{rms}	330 A_{rms}
System voltage	400 V ± 10 %		
Nominal frequency	50/60 Hz ± 2 %		
Number of phases	3		
Phase connections	3 phases without neutral conductor (TN, TT, IT)		
Harmonics compensation	Individually up to the 49th harmonic		
Degree of compensation	> 98 %		
Correction of power factor cos φ	Up to 1.0		
Parallel operation	OSFS-UL Active Filters can be operated in parallel		
Response time	< 1 ms		
Power loss	< 2480 W	< 4835 W	< 7190 W
Maximum air flow requirements	600 m^3/h	1200 m^3/h	1800 m^3/h
Noise level	< 70 dB		
Ambient conditions	0 up to 95 % relative humidity, non-condensing, max. altitude: 1000 m above sea level		
Operating temperature ambient	0 to 50 °C, up to 40 °C without derating		
Dimensions (W x H x D) [mm]	800 x 2155 x 610		
Weight [kg]	335	472	609
Cabinet colour	Cabinet: RAL 7035 (grey), Base*: RAL 7022 (dark grey)		
Type of protection	UL Type 1		
Environmental conditions	Class 3C3 (chemical), class 3S3 (mechanical)		
Electromagnetic compatibility (EMC)	EN 61000-6-2, EN 61000-6-4		
Certificates	UL, cUL, UKCA		
Interfaces	Web server, Ethernet (Modbus TCP)		

The units can be installed in parallel and are available as standard versions from 208 V to 480 V. Other voltages, interfaces and IP-classes on request. *base can be ordered separately

Connection diagram (example)

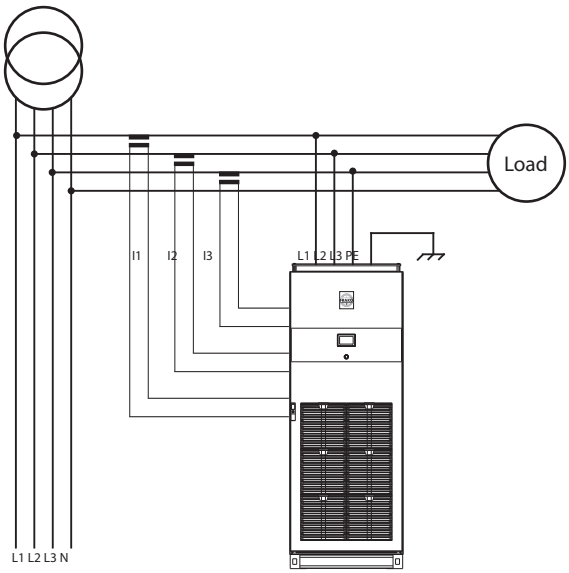

Dimensions

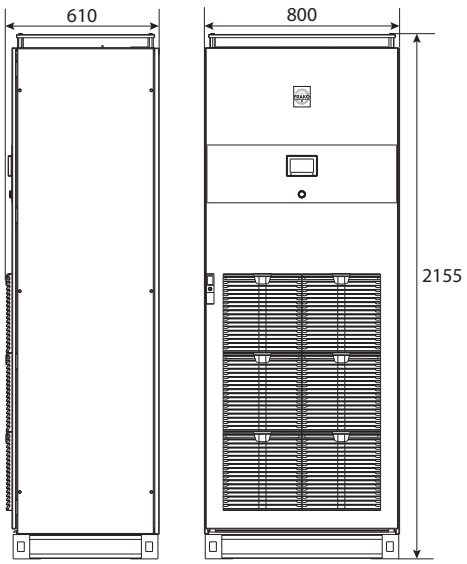

All dimensions in mm

Subject to technical changes / © FRAKO GmbH / www.frako.com

تسلاکالا
021-9102 6126 | teslakala.com

Technical Data

OSFS-UL (3-wire modular device, UL), 600 V

Type	OSFS 90-600-3-UL	OSFS 180-600-3-UL	OSFS 270-600-3-UL
Article-No.	39-22426	39-22427	39-22428
Power rating	94 kVA	187 kVA	281 kVA
Compensating current per phase at 50/60 Hz	90 A_{rms}	180 A_{rms}	270 A_{rms}
System voltage	600 V ± 10 %		
Nominal frequency	50/60 Hz ± 2 %		
Number of phases	3		
Phase connections	3 phases without neutral conductor (TN, TT, IT)		
Harmonics compensation	Individually up to the 49th harmonic		
Degree of compensation	> 98 %		
Correction of power factor cos φ	Up to 1.0		
Parallel operation	OSFS-UL Active Filters can be operated in parallel		
Response time	< 1 ms		
Power loss	< 2836 W	< 5547 W	< 8258 W
Maximum air flow requirements	600 m³/h	1200 m³/h	1800 m³/h
Noise level	< 70 dB (A)		
Ambient conditions	0 up to 95 % relative humidity, non-condensing, max. altitude: 1000 m above sea level		
Operating temperature ambient	0 to 50 °C, up to 40 °C without derating		
Dimensions (W x H x D) [mm]	800 x 2155 x 610		
Weight [kg]	351	495	639
Cabinet colour	Cabinet: RAL 7035 (grey), Base*: RAL 7022 (dark grey)		
Type of protection	UL Type 1		
Environmental conditions	Class 3C3 (chemical), class 3S3 (mechanical)		
Electromagnetic compatibility (EMC)	EN 61000-6-2, EN 61000-6-4		
Certificates	UL, cUL, UKCA		
Interfaces	Web server, Ethernet (Modbus TCP)		

The units can be installed in parallel and are available as standard versions from 480 V to 600 V. Other voltages, interfaces and IP-classes on request. *base can be ordered separately

Connection diagram (example)

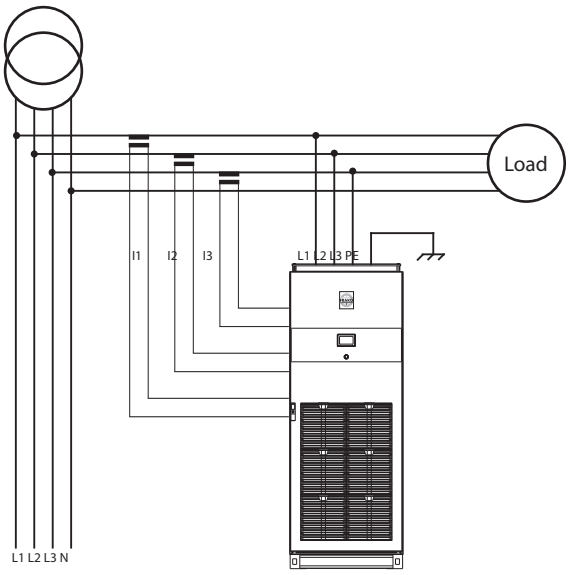

Dimensions

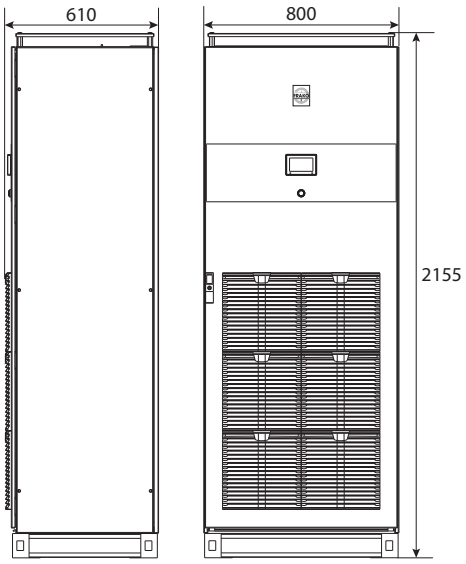

All dimensions in mm

تسلاکالا
021-9102 6126 | teslakala.com

POWER QUALITY AND ENERGY MEASUREMENTS

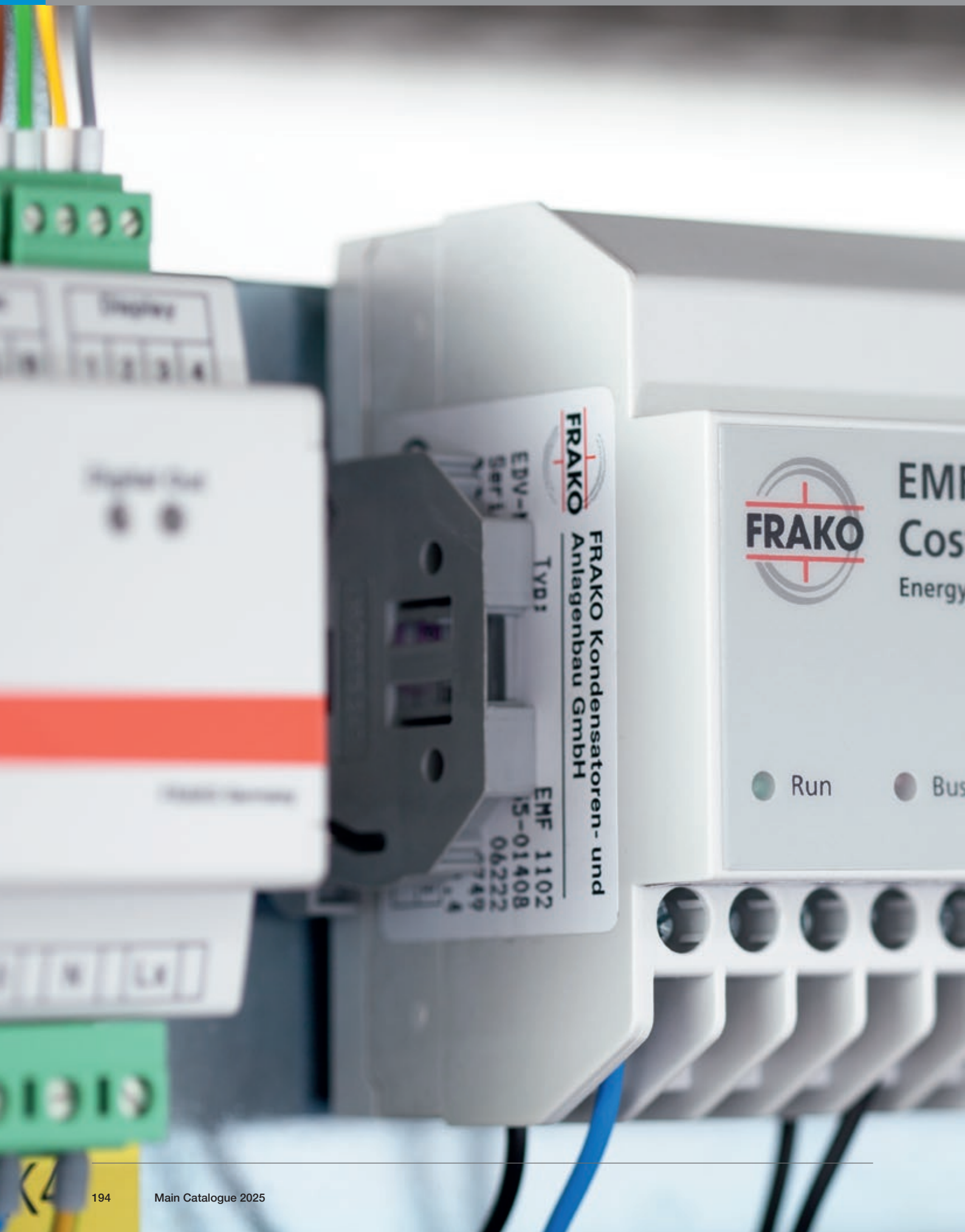

تسلاکالا
021-9102 6126 | teslakala.com

Devices of the PQ Series

Page 198




1

PQ Analysis

Page 212




2

Maximum Demand Control

Page 222



3

System Components

Page 234




4

تسلاکالا
021-9102 6126 | teslakala.com

Subject to technical changes / © FRAKO GmbH / www.frako.com

تسلاکالا
021-9102 6126 | teslakala.com

POWER QUALITY AND ENERGY MEASUREMENTS

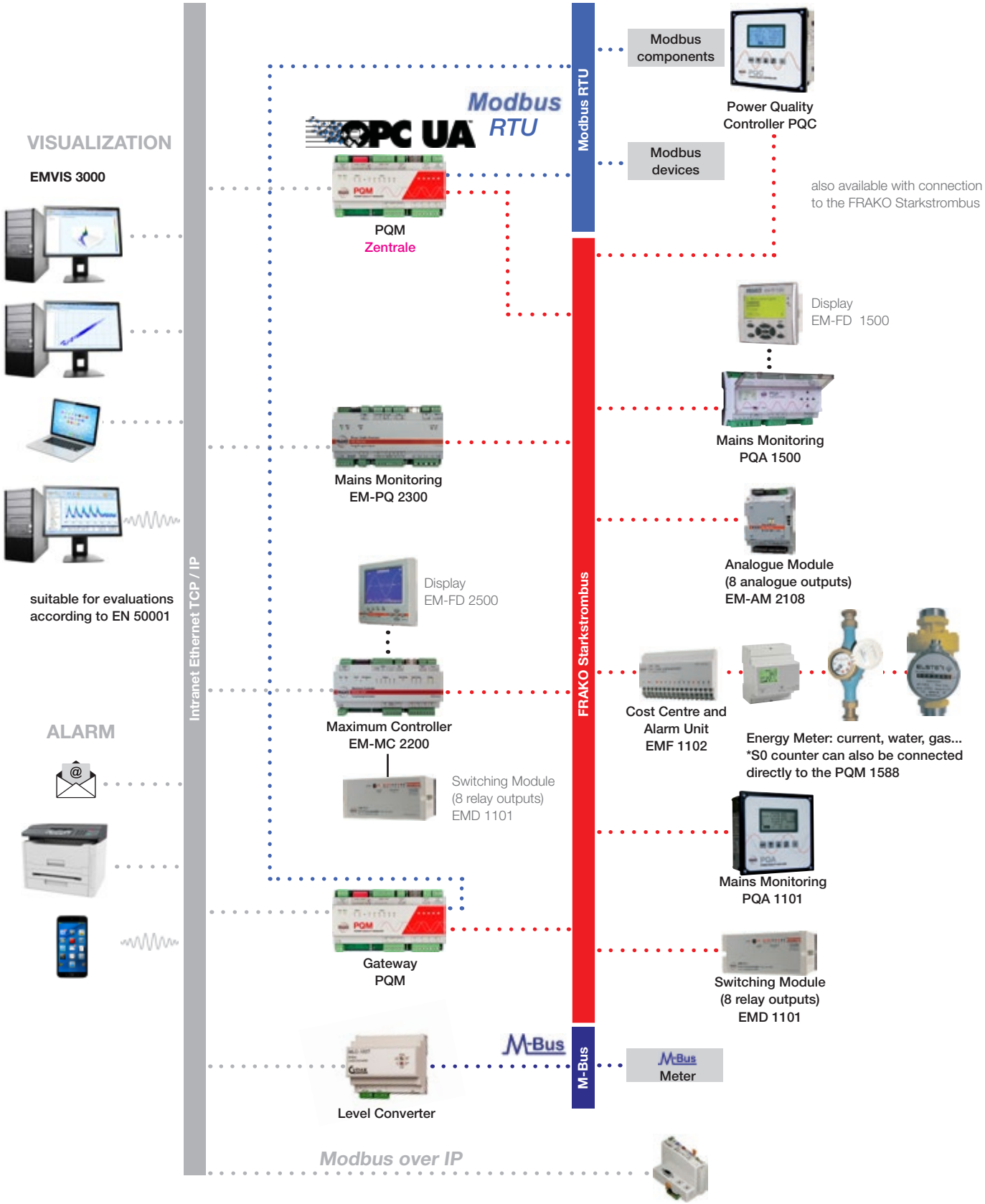

تسلاکالا
021-9102 6126 | teslakala.com

1

Devices of the PQ Series

Power Quality Analyzer

Page 191

Power Quality Manager

Page 197

Subject to technical changes / © FRAKO GmbH / www.frako.com

تسلاکالا
021-9102 6126 | teslakala.com

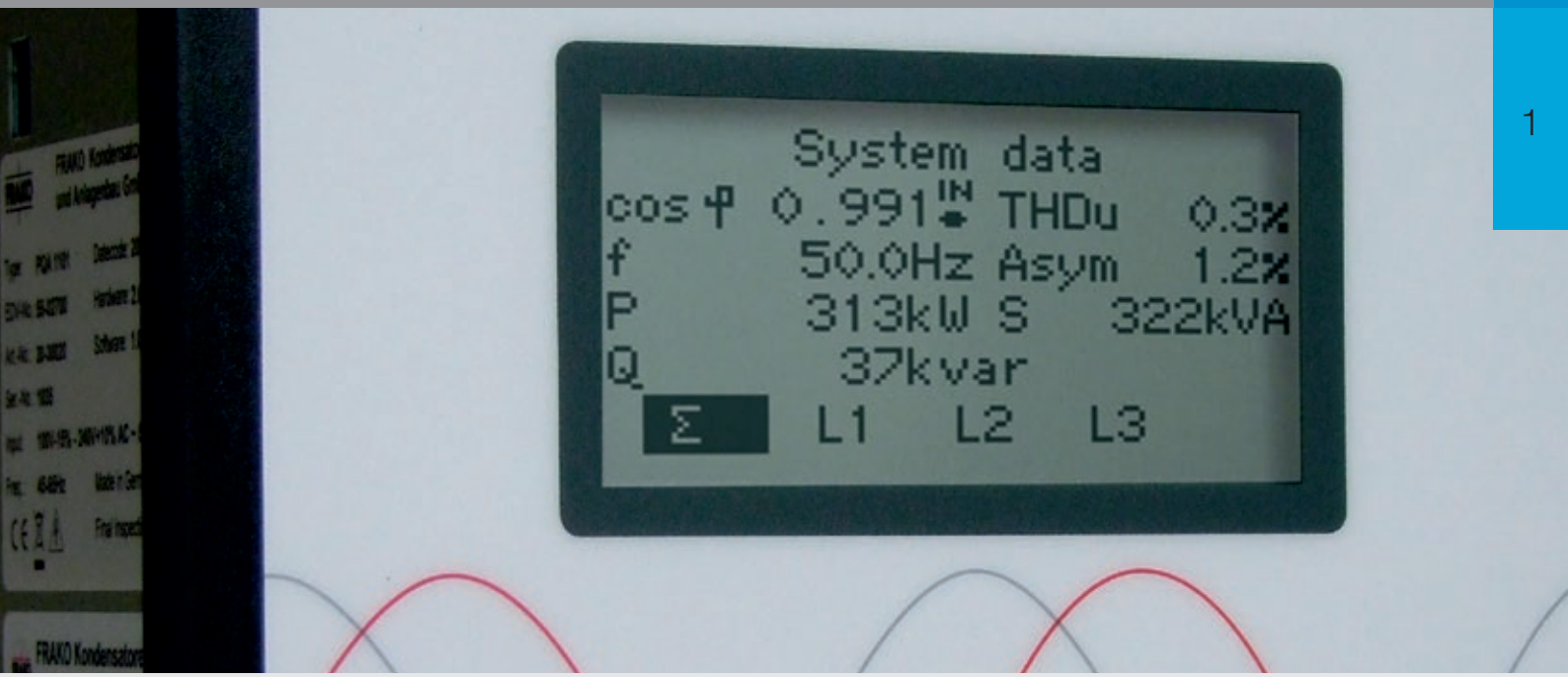

Mains Analysis Device

**The power quality of electrical supply networks plays an increasingly important role for the operational safety of electrical infrastructure.
Therefore it becomes more and more important to take appropriate measures to monitor the power quality.**

Unlike in the past, it is no longer sufficient to measure once and not pay any further attention to power quality if the values are inconspicuous.

Due to complex manufacturing processes, fluctuating load conditions and also due to an increasing degree of automation of industrial plants it is more important than ever to continuously monitor the quality of the product “current”.

Regardless of whether a single analyzer is used to monitor individual machines or consumption, or whether the entire electrical equiment is monitored and analyzed by means of an energy management system – FRAKO offers the optimal solution.

In order to facilitate the control of the “Power Quality” or its legal limit values, various alarm channels are available, such as warning lights, e-mail, SMS etc.

Depending on type and version this can be achieved already by a single device or – even better – in combination with the FRAKO Energy Management System.

Measurement of residual current, PE-monitoring, monitoring of transformers, measurements at low voltage distribution boards as well as monitoring of individual machines and consumers …. FRAKO has the solution for every application.

تسلاکالا
021-9102 6126 | teslakala.com

Devices of the PQ Series

Power Quality Analyzer

	PQA 1500	PQA 1101
		
Voltage	85-267 V AC or 100-377 V DC	85-267 V AC or 100-377 V DC
Frequency	85-267 V AC or 100-377 V DC	45-65 Hz
Power consumption	Max. 7 VA	Max. 7 VA
Contact temination 3/4/5-wire	• / • / -	• / • / -
Current measurements	3 x X/5A (Transformer current > 15 mA), electrically isolated	3 x X/5A (Transformer current > 15 mA), electrically isolated
Voltage measurements	3 x 60-400 V AC (external/neutral conductor) 3 x 115-525 V AC (external/external conductor)	3 x 60-400 V AC (external/neutral conductor) 3 x 115-690 V AC (external/external conductor)
Harmonics V/A	1-19	1-19
Short term interruptions	•	•
Active energy class	1	1
Analogue In-/Outputs	-	2 temperature / -
Digital In-/Outputs	1 alarm signalling contact 250 V AC, max. 3 A	Tariff input for selection of 2 profiles / 1 alarm signalling contact 250 V AC, max. 3 A
Memory Min./Max. values	•	•
Interfaces		
Ethernet	•	•
FRAKO Energy Management System	• via FRAKO Starkstrombus	• via FRAKO Starkstrombus
RS-485	•	•
Webserver	•	•
Recommended applications	Machine disposals / transformer	Machine disposals / transformer
Article-No.	20-30030	PQA 1101 FRAKO Starkstrombus: 20-30020 PQA 1101 with Ethernet interface: 20-30022

Subject to technical changes / © FRAKO GmbH / www.frako.com

تسلاکالا
021-9102 6126 | teslakala.com

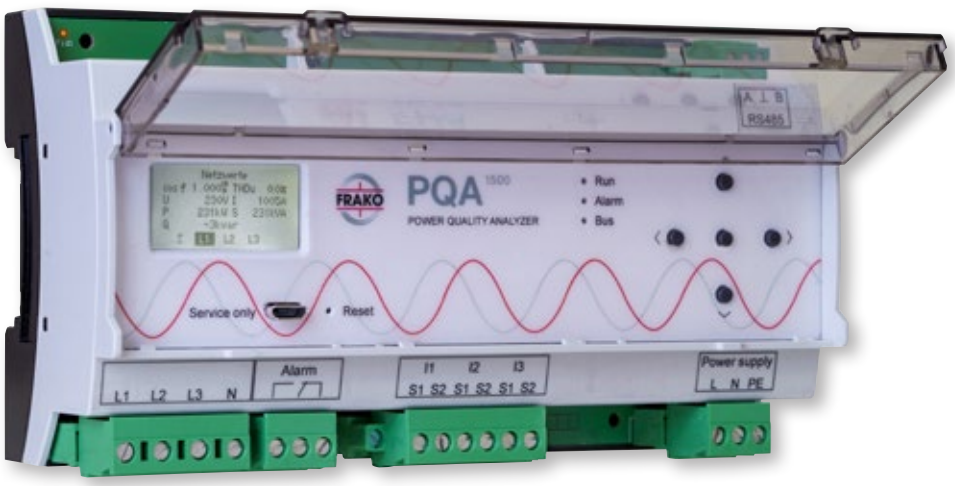

PQA 1500
Power Quality Analyzer

Meter for active and reactive power of transformers and machine outlets in low-voltage main distributions with FRAKO bus connection and network connection for integration into the FRAKO data acquisition system according to EN 50001. The expanded measurement functions of Power Quality assist in reliably monitoring the increasingly challenging network conditions and thereby enhancing the supply reliability of the electrical installation.

Description
- Monitoring and evaluation of the mains quality; measurement of all relevant mains data in low and medium voltage mains
- Energy meter for active power (input and output) and reactive power
- Integrated alarm management with different output configurations: contact outputs, display, LED
- Connection to the FRAKO Energy Management System via FRAKO Starkstrombus (RS 485) and TCP/IP
- Top hat rail mounting

Measurement functions:
- Voltages of the phase-to-phase / phase-to-neutral
- Currents of the 3 phases and in N / PEN
- Power factor (cos-φ), active, reactive, and apparent power of the phases
- Frequency and asymmetry (unbalanced load)
- THD of voltage and current of the phases
- Portion of harmonic voltage/current U2/I2...U19/I19
- Manual recording of voltage and current up to the 50th harmonic

Measurement value and Min. Max. memory:
Measurement data per phase
- Voltage
- Current
- Powers (Active, Reactive, and Apparent Power)
- Mains frequency
- Voltage harmonics
- Current harmonics
- Temperatures
- Measurement via three external current transformers
- Menu guidance in plain text and display of up to 8 measurement values simultaneously
- Menu-driven programming with user guidance
- Backlit display
- Backup of meter readings and limit values in the event of a power outage

تسلاکالا
021-9102 6126 | teslakala.com

Devices of the PQ Series

Power Quality Analyzer for DIN rail mounting or door installation

Technical Data

Measurement inputs	
Voltage path	0 V AC – maximum 580 V AC (phase – phase, absolute limits), suitable for 115 – 525 V AC systems, electrically interconnected via high resistances, measurement of medium voltages possible using an x/100 V transformer; In areas where UL / CSA standards apply in systems with nominal voltages 115 – 600 V AC; power failure detection after duration of a half-wave
Frequency	45-65 Hz
Power consumption	Max. 5 VA
Fuse protection	Max. 2 A external protection required
Current path	x/5 A AC or x/1 A AC (transformer secondary current > 15 mA), electrically isolated, power draw maximum 1 VA per transformer connection, continuous overload rating up to 6 A AC, transient overload maximum 10 A AC for 10 seconds
Power consumption	Max. 1 VA each transformer connection
Outputs	
Alarm contact	Potential-free changeover contact, AC-14 250 V AC, maximum 3 A, or DC-13 30 V DC, maximum 3 A. Note: Utilization category AC-14 / DC-13 according to IEC 60947-5-1.
Interfaces	
1 FRAKO Starkstrombus	For connection to FRAKO Energy Management System, according to EN 50170 (P-Net) standardised fieldbus, RS 485 Transfer rate: 76.8 kbit/s Type/ Protocol: RS-485 / P-Net
Display	internal
Ethernet interface	Modbus TCP, Webserver
Controls	5 buttons
Display	Illuminated LCD display with 128 x 64 pixels
Connections	Pluggable via connector strips (included in delivery)
Mechanical construction	
Dimensions	161,6 x 89,7 x 60,5 mm (W x H x D)
Ingress protection	Housing/clamps: according to DIN EN 60529 IP 30 / IP 20
Version	Protection class 1 according to DIN EN 61140
Housing	Flame-retardant UL94-V0
Installation	On standard rail 35 mm according to DIN EN 50022
Mounting position	Optional
Weight	Approx. 0.5 kg
Operating conditions	
Ambient temperature	-20 °C...+60 °C

Optional Accessories

Article-No.	Type	Description
20-10317	EM-PQ-SW	Software for the configuration and online display of data from the EM-PQ 1500 Power Quality Monitor. Access via: data collector. **Note:** included with FRAKO-NET when supplied on CD-ROM

Dimensions

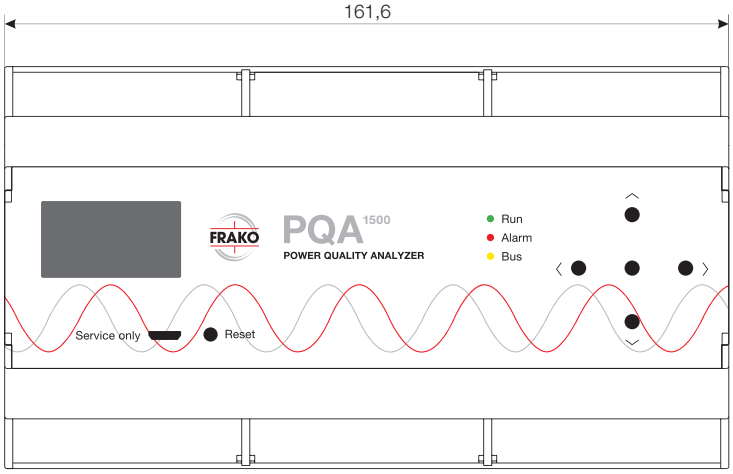

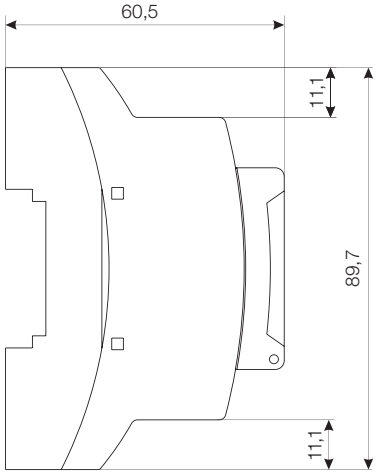

Dimensional drawing PQA 1500

All dimensions in mm

Subject to technical changes / © FRAKO GmbH / www.frako.com

تسلاکالا
021-9102 6126 | teslakala.com



PQA 1101
Power Quality Analyzer

A measuring and monitoring instrument for the acquisition, analysis and supervision of all key electrical data in low voltage 3-phase systems from 115 V to 690 V.

Description

Measurement functions:

- Phase-phase and phase-neutral voltages
- Currents in the 3 phases and N / PEN conductors
- cos φ, active, reactive and apparent power for each phase
- Frequency and asymmetry (load unbalance)
- THD of voltage and current for each phase
- Proportion of voltage/current harmonics V2 – V19 / I2 – I19
- Manual acquisition of voltage and current up to the 50th harmonic

Selectable options:

- 2x active and reactive energy via external tariff switching, or:
  - 1x active and reactive energy (imported)
  - 1x active energy (power feed-in / in-house generation)
- 2x temperature via external PT100 RTD probes

Measurement data and Min/Max memory:

Measurement data per phase

- Voltage
- Storage
- Power (active, reactive and apparent power)
- Supply frequency
- Voltage harmonics
- Current harmonics
- Temperatures

- Measurement via three external current transformers
- Menu-driven user interface in plain language with display of up to 8 measurement readings simultaneously
- Menu-driven configuration with user dialogue
- Backlit display
- Meter readings and alarm limits saved on power failure

تسلاکالا
021-9102 6126 | teslakala.com

Technical Data

Power supply	
Mains voltage	85 V AC – 267 V AC (absolute limits), Frequency 45 – 65 Hz or 100 V DC – 377 V DC (absolute limits)
Power consumption	Max. 5 VA
Fuse protection	2 A external protection required
Measurement input	
Voltage path	80 V AC – maximum 760 V AC (phase – phase, absolute limits), suitable for 115 – 690 V AC systems, electrically interconnected via high resistances, measurement of medium voltages possible using an x/100 V transformer; In areas where UL / CSA standards apply in systems with nominal voltages 115 – 600 V AC; power failure detection after duration of a half-wave
Current path	x/5 A AC or x/1 A AC (transformer secondary current > 15 mA), electrically isolated, power draw maximum 1 VA per transformer connection, continuous overload rating up to 6 A AC, transient overload maximum 10 A AC for 10 seconds
Outputs	
1 Alarm signalling contact	Volt-free NO contact, AC-14 250 V AC, maximum 3 A or DC-13 – 30 V DC, maximum 3 A, Note: utilization category AC-/DC- as per IEC 60947-5-1
Inputs	
Tariff inputs	2 profiles selectable (e.g. HT/NT) Control via open collector output. Voltage withstand rating required: 10 V.

Interfaces (mode can be selected)	
Ethernet Interface	Modbus TCP, Webserver
FRAKO Starkstrombus	For connection to the FRAKO Energy Management System, standardized fieldbus, RS 485, Protocol P-Net
Operating elements	Membrane keyboard with 5 keys
Display elements	Backlit LC Display with 128 x 64 pixel
Connections	Plug-in connecting strips (included with delivery)
Mechanical construction	
Dimensions	Dimensions of front panel: 144 x 144 mm (DIN 43700), panel cut-out: 138 x 138 mm (DIN 43700), installation depth: 75 mm
Ingress protection	Front of instrument IP40 (with seal set IP54), rear of instrument IP20 all as per 60529, contamination level 2 as per EN 61010-1:2011-07
Version	Housing protection class 1 according to DIN EN 61140
Installation	From front panel with screwdriver
Weight	Approx. 0.77 kg
Operating conditions	
Ambient temperature	0 °C up to +55 °C

Optional Accessories

Article-no.	Type	Description
20-10311 EMA-SW	EMA-SW	Software for configuration and online display for EMA 1101. Access through: Data collector. **Note:** Included in the scope of delivery for FRAKO-NET (with CD shipment).

Dimensions

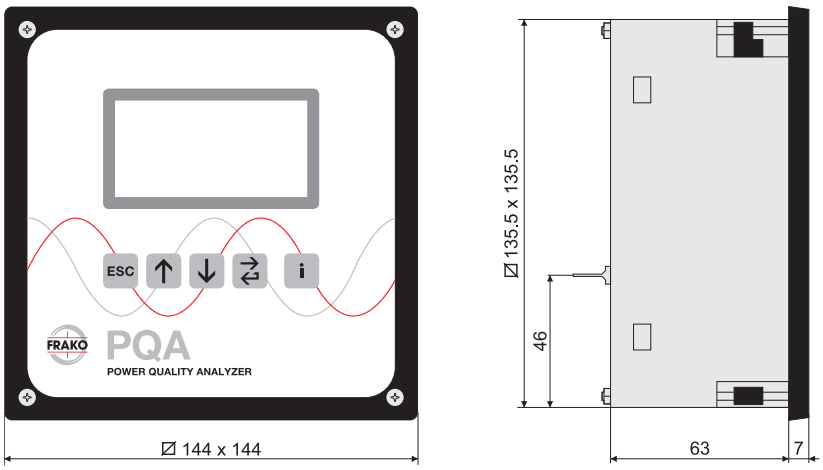

Dimensional Drawing PQA 1101

all dimensions in mm

Subject to technical changes / © FRAKO GmbH / www.frako.com

تسلاکالا
021-9102 6126 | teslakala.com



Version 3 – Now even better!

Including 6 x S0 pulse inputs

PQM
Power Quality Manager

With the new PQM 3.0 as a central unit, all requirements for capturing parameters related to energy and power quality are fulfilled. Version 3.0 impresses with higher computing power while simultaneously reducing energy consumption. This results in increased reliability and improved security in processing the invaluable energy data. Enhanced communication capabilities, in addition to the proven OPC-UA server and REST interface, include support for the MQTT protocol and the Influx-DB protocol. This further improves access to cloud systems and enhances IoT capability. The update of the operating system ensures an increase in IT security and secures the future viability of the FRAKO data acquisition system.

Description
The PQM Power Quality Manager is a versatile all-rounder that even just as a gateway offers a variety of uses. Its integrated RS-485 and RJ45 interfaces and its built-in flexibility enable the PQM to interpret diverse protocols and access fieldbus instruments through the communications network.

Protocol options for connection to measuring instruments:
- FRAKO Starkstrombus
- Modbus RTU
- Modbus TCP

Using an external coupler:
- M-BUS
- KNX

If additional system points are acquired, the Power Quality Manager will automatically activate its data collector function plus some other useful features:
- OPC UA server
- S0 pulse inputs (6x)
- Numerous alarm functions:
  – Alarm limits (lower/upper) for registered metering and analogue channels
  – Alarm function, individually or in groups via various alarm routes: contacts on the PQM, e-mail, alarm report

User benefits:
- EMVIS 3000 visualization software (included with appropriate system points)
- Web interface for basic configuration
- Software updates to expand range of functions
- Simple data exchange via OPC UA
- IoT compatible, REST interface (machine to machine)

A specified number of system points are required for collecting data from the measuring instruments. These devices can be combined at will up to the limiting number for each type of device.

تسلاکالا
021-9102 6126 | teslakala.com

1

Your easy access to Power Quality Management 4.0

PQM as bus gateway:
- FRAKO Starkstrombus
- Modbus RTU

PQM as universal data acquisition system:
- Reception and collection of measurement readings and other data from connected devices via Modbus, M-Bus, S0 pulses and TCP/IP
- Monitoring of data with individually configurable alarm limits
- Alerting when variables go outside set limits using various media such as alarm relays or e-mail
- Optimum scalability, providing solutions for all, from the smallest applications right up to major businesses

PQM as remote monitoring unit:
- Monitoring
- Generating alarms

PQM as data collector incl. synchronization:
- Data transfer to third-party systems
- Collation of machine and energy data
- Visualization with any desired software

6 x S0 pulse inputs, freely programmable, can be used as/for:
- Meter
- Operating hours (seconds) counter
- Status channel
- Pulse input for time synchronization with utilities
- Collector of impulses from transducers which convert process variables into a frequency, for example, temperature, humidity mg/m² etc.
- Power calculation from meter pulses
- OPC UA Server (integrated in the device)
- To increase processing power – more stable data transfer via bus and Ethernet
- Pulse acquisition (S0 pulse inputs) for another PQM
- Complete small system incl. data collection of pulse meters

Interfaces such as OPC UA and REST

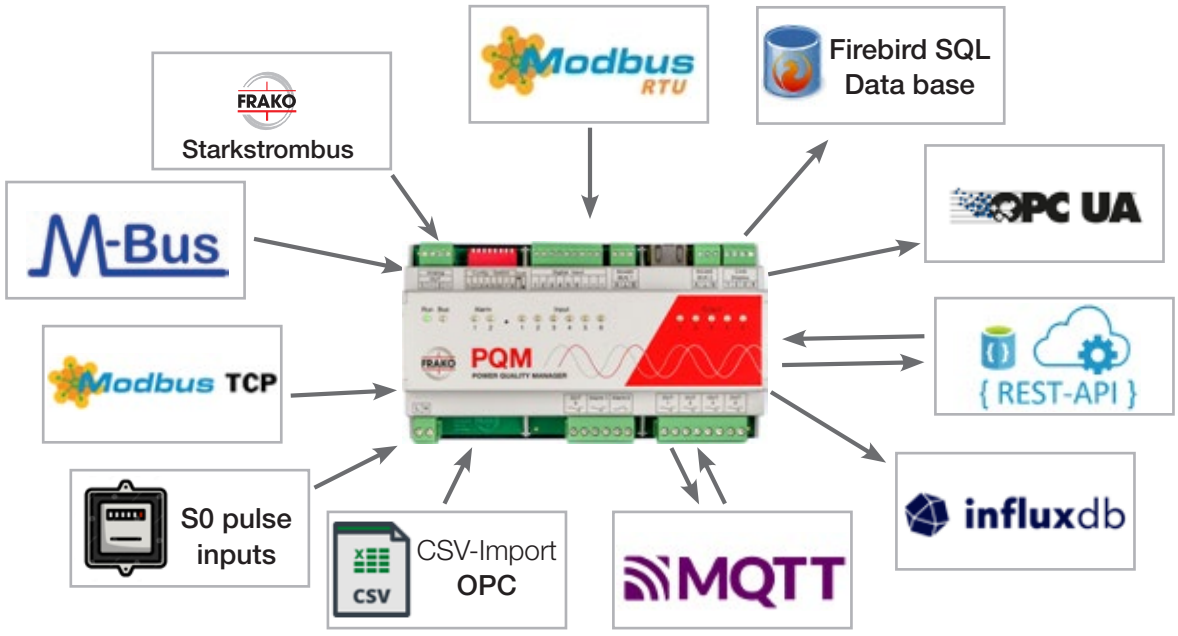



Software for the display/ evaluation of the data:
- including EMVIS 3000 to enable total visualization
- Comprehensive data evaluation
- CSV export facility

Software according to BAFA suitable for EN 50001

OPC UA

Interface for:
- Industry 4.0
- All types of data
- Free choice of database
- Free choice of visualization
- Customized solutions
- Third-party systems

Subject to technical changes / © FRAKO GmbH / www.frako.com

تسلاکالا
021-9102 6126 | teslakala.com

Technical Data

Power Supply	
Supply voltage	100 V AC – 253 V AC (absolute limits), 230 V DC (absolute limits)
Frequency	45 up to 65 Hz
Power consumption	Max. 7 W / 18 VA
Fuse protection	Max. 2 A (slow acting) external protection required
Interfaces	
Ethernet interface	10/100 MBit/s, RJ45 RS-485 Bus 1 | Modbus RTU RS-485 Bus 2 | FRAKO Starkstrombus
Outputs	
Relay contact	5 contacts – bistable, 250 V / 2 A AC or 30 V / 2 A DC
Alarm contact	1 contact – bistable, 250 V / 2 A AC or 30 V / 2 A DC 1 NC, 250 V / 2 A AC or 30 V / 2 A DC
Inputs	
6 pulse inputs	S0 pulse inputs (DIN 43864) for connecting to volt-free contacts, Open-contact voltage: 15 V, Max. line resistance: 800 Ohm, Short-circuit current: 18 mA, Pulse frequency: 0.1 to 20 Hz
Connections	
via plug-in type screw terminals	Conductor cross-section max. 1.5 mm², min. 0.14 mm², Relay-, alarm contacts and supply: Conductor cross-section max. 2.5 mm², min. 0.2 mm², Rated value insulation: 250 V AC, 80 °C
Control elements	
DIP switch	8 pieces
Display elements	
LED	15 pieces
Mechanical Construction	
Dimensions	161.6 mm x 89.7 mm x 60.5 mm (W x H x D)
Installation	On standard rail 35 mm according to DIN EN 50022
Weight	approx. 0.4 kg without packaging
Ingress protection	Enclosure IP30, terminals IP10 according to DIN EN 60529 pollution degree 2 according to EN 61010-1:2011-07
Version	Enclosure protection class II according to DIN EN 61010
Housing	Flammability according to UL 94 V0 as declared by the manufacturer

Mechanical Construction	
EMV	EN 55022 Class B : 2010 + AC : 2011 EN 61000-3-2 : 2014 EN 61000-3-3 : 2013 EN 61000-6-3 : 2007 + A1 : 2011 EN 61000-6-2 : 2005 EN 61000-4-2 : 2009 EN 61000-4-3 : 2006 + A1 : 2008 + A2 : 2010 EN 61000-4-4 : 2012 EN 61000-4-5 : 2014 EN 61000-4-6 : 2014 EN 61000-4-8 : 2010 EN 61000-4-11 : 2004
Operating conditions	
Operating temperature ambient	0 °C…45 °C
Installation height	Geographical height max. 2000 m above sea level
Article-No.	20-10090 without system points
PC requirements for FRAKO-NET software package	
Hardware	• Min. Intel Core I5 • Main memory min. 4 GB RAM • 10 GB free hard drive space • Ethernet 10/100 Mbit/s network connection or/and one free serial interface • DVD drive • SVGA graphics adapter • Colour screen with minimum resolution of 1024 x 768
Software	• Microsoft® Windows®* 10 • Microsoft® Windows®* 7 (x32/x64) • Microsoft® Windows®* Server 2008 R2 • current browser for example, Mozilla Firefox * Registered trademarks of Microsoft Corporation

Optional accessories

Article-No.	Type	Description
20-10495	System points upgrading package PQM	10 system points incl. system visualization EMVIS 3000
20-10496		50 system points
20-10497		100 system points

تسلاکالا
021-9102 6126 | teslakala.com

System points per integrated device	Upper limits
30 System points per EM-MC 2200	Max. 4 units EM-MC 2200 per PQM
15 System points per EM-PQ 2300	Max. 32 units EM-PQ 2300 per PQM in Slavemode, or max. 8 in Mastermode
15 System points per PQA 1101	Max. 32 units PQA 1101 per PQM
7 System points per PQC (single phase)	
10 System points per PQC (three phase)	
7 System points per EM-PQ 1500	Max. 32 units EM-PQ 1500 per PQM
1 System point per channel of EM-MC 2200, PQA 1101, EM-PQ, EMF 1102 or PQM	Max. 550 metering-, analogue-, status- or alarm channels per PQM
10 System points to activate the S0 function of the PQM	
7 System points per PQA 1500 Limit: Max. 32 points per PQM	

Web interface Start screen

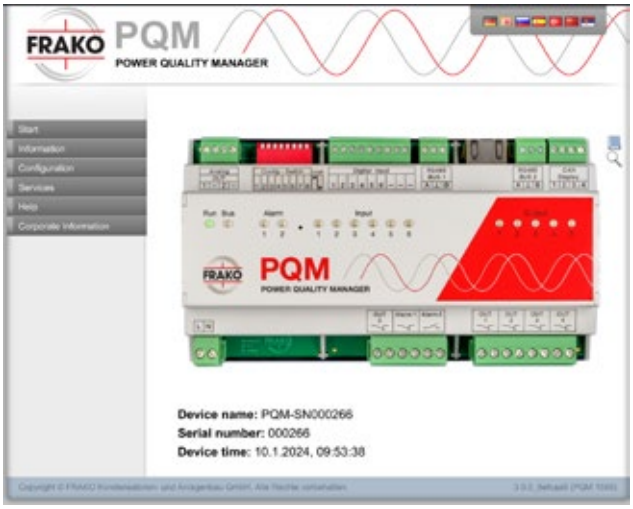

Web interface Main Configuration – IP address

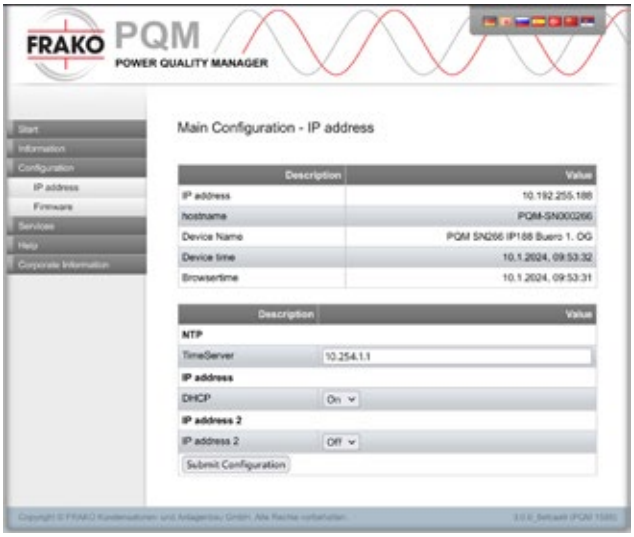

Dimensions

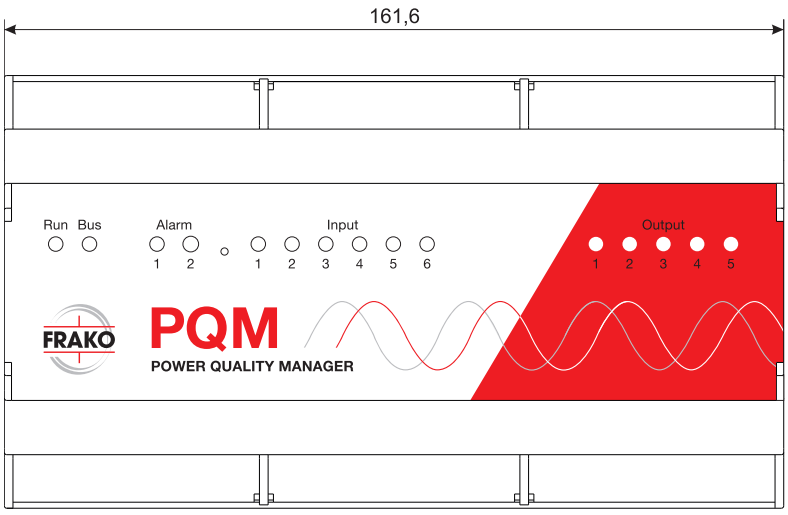

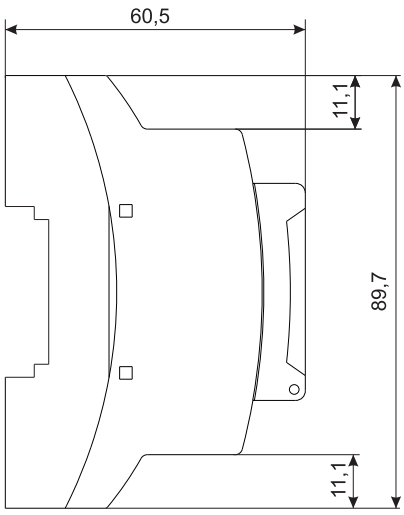

Dimensional drawing PQM

All dimensions in mm

Subject to technical changes / © FRAKO GmbH / www.frako.com

تسلاکالا
021-9102 6126 | teslakala.com

OFFICE BUILDING

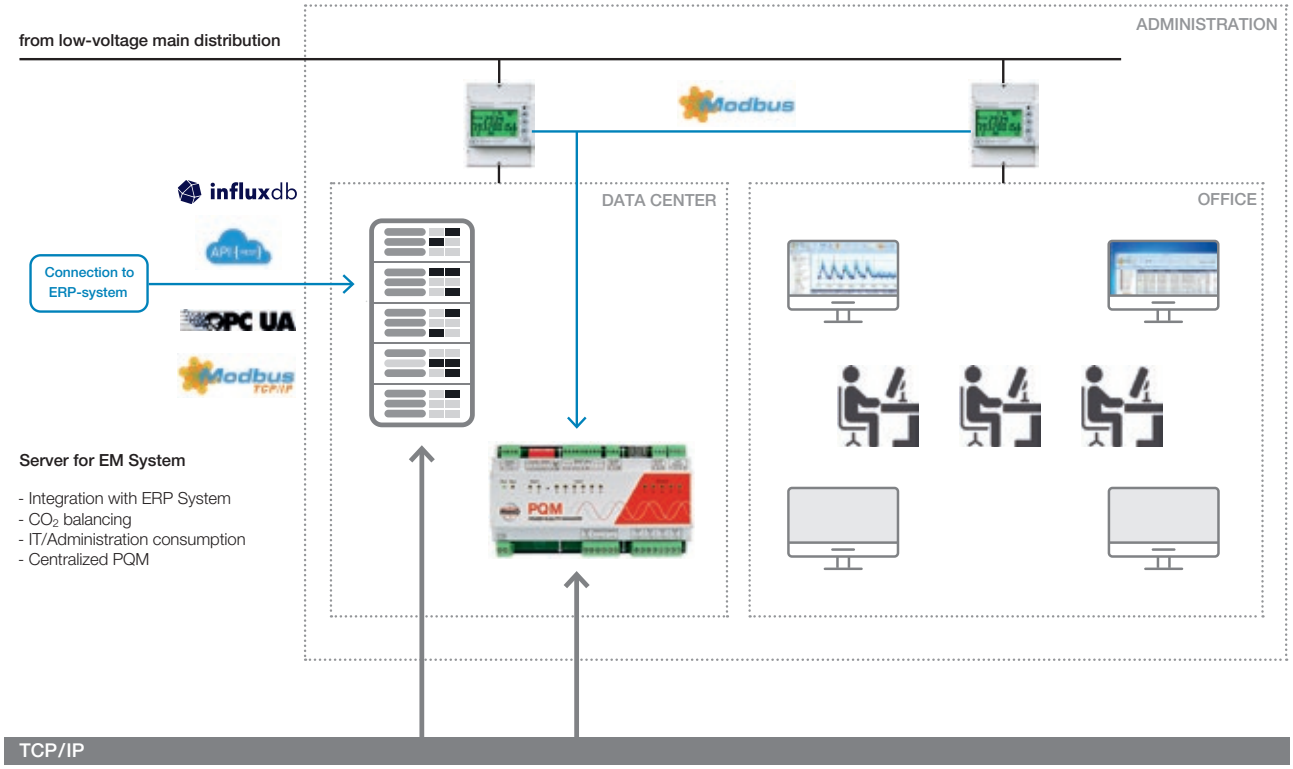

PHOTOVOLTAIC SYSTEM

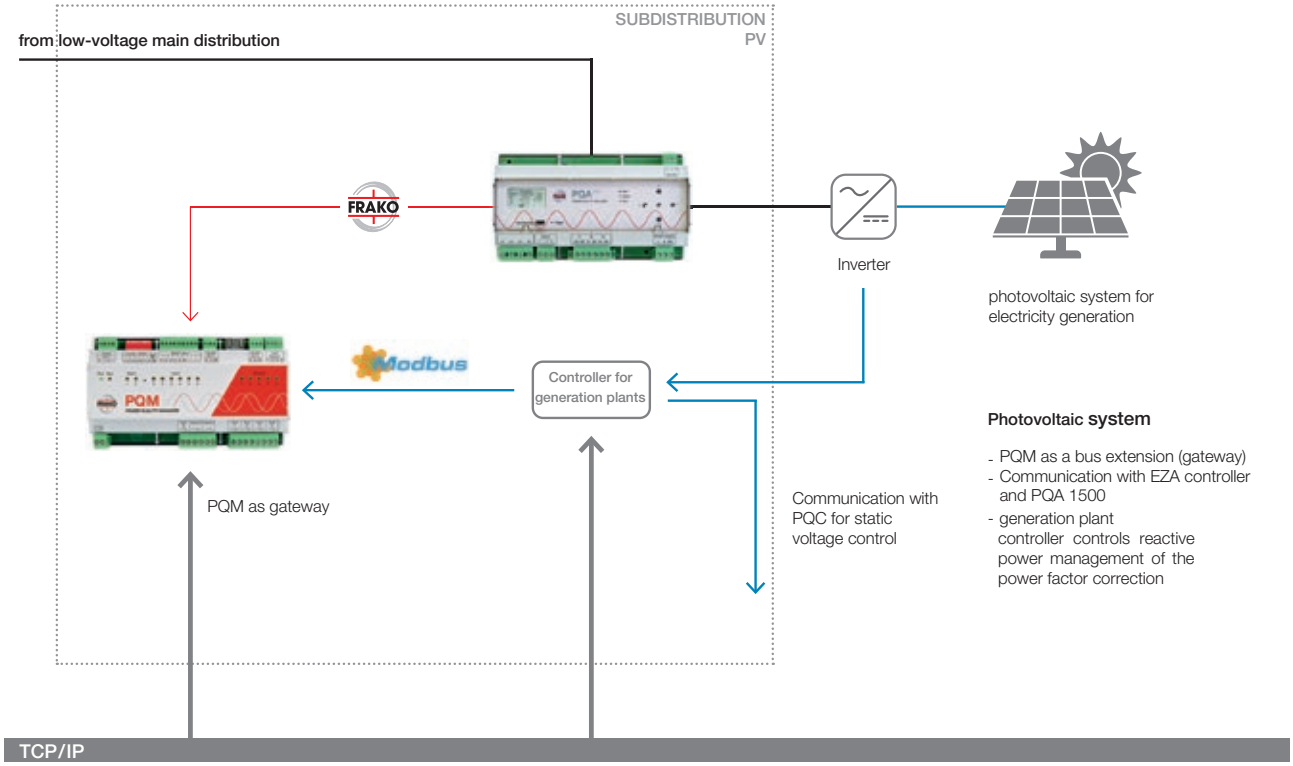

تسلاکالا
021-9102 6126 | teslakala.com

PRODUCTION

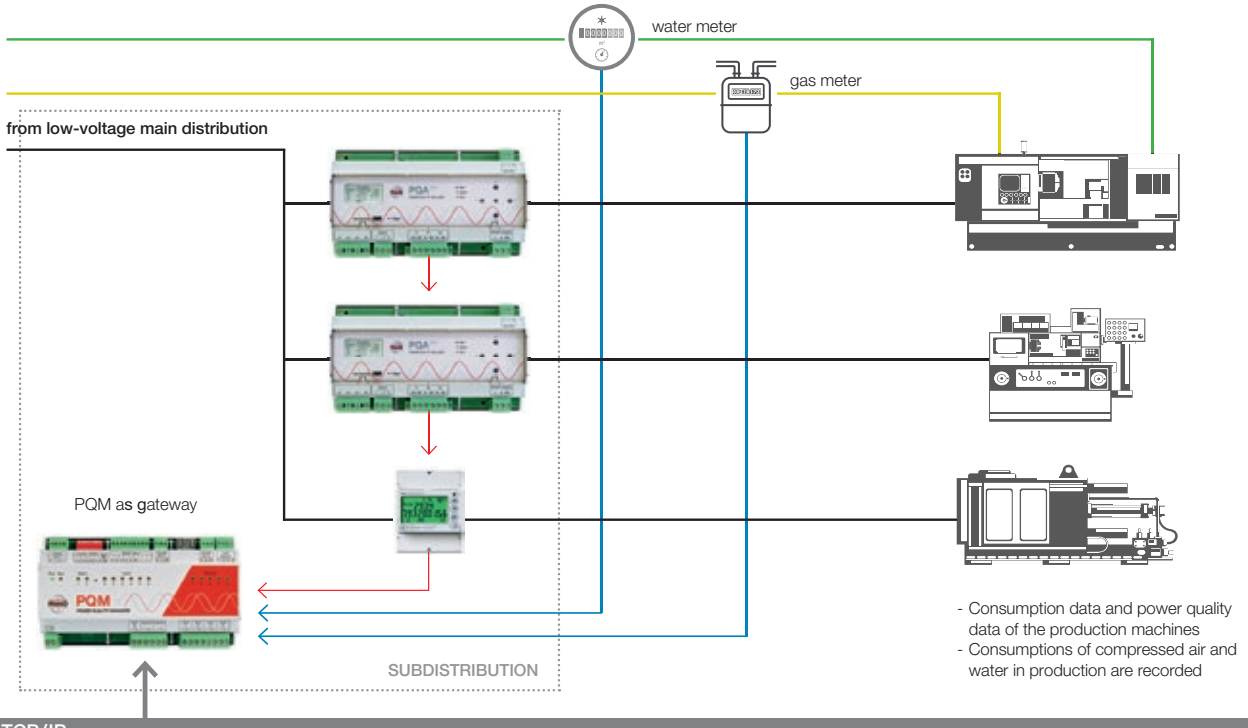

- Consumption data and power quality data of the production machines
- Consumptions of compressed air and water in production are recorded

TCP/IP

CHARGING STATIONS

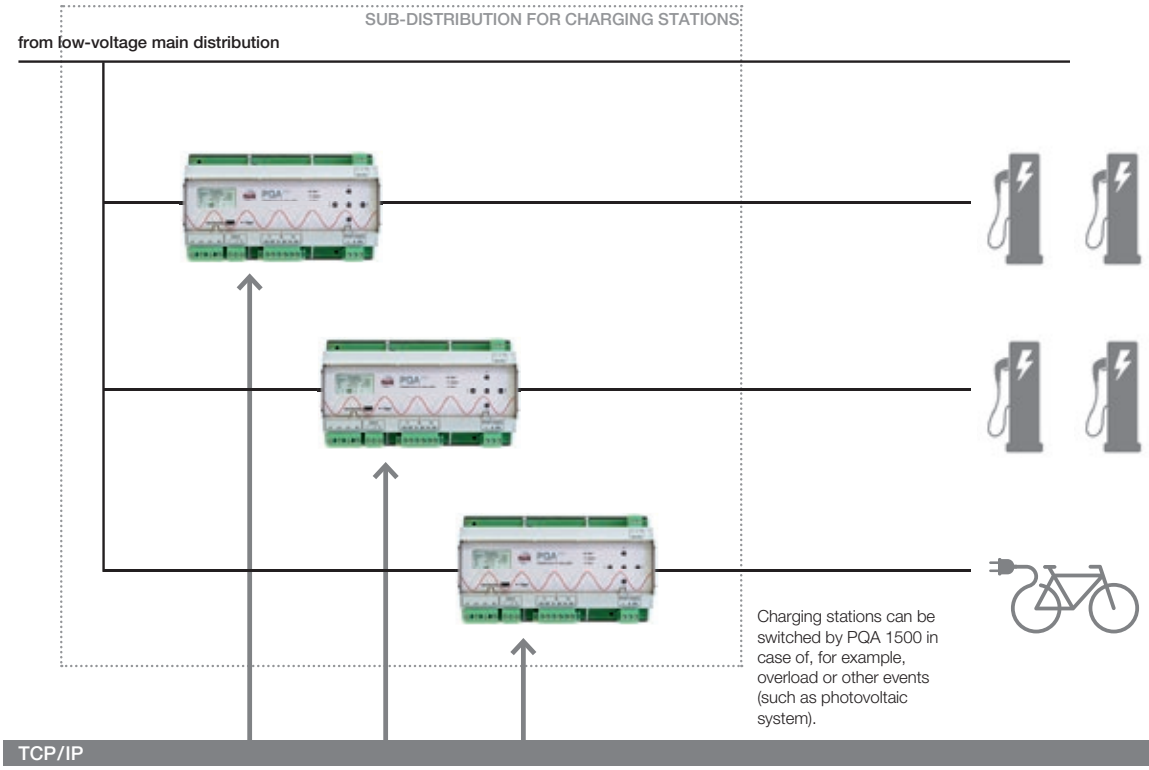

Charging stations can be switched by PQA 1500 in case of, for example, overload or other events (such as photovoltaic system).

TCP/IP

Subject to technical changes / © FRAKO GmbH / www.frako.com

تسلاکالا
021-9102 6126 | teslakala.com

Devices of the PQ Series

Power Quality Manager

تسلاکالا
021-9102 6126 | teslakala.com

PQ Analysis

2

Visualization Software

Page 213

Software for Cost Centre Analysis

Page 219

Subject to technical changes / © FRAKO GmbH / www.frako.com

تسلاکالا
021-9102 6126 | teslakala.com

System visualization is INCLUDED if a PQM with system points is purchased!



suitable for evaluations according to EN 50001

Eligible for funding according to BAFA

EMVIS 3000
System-Visualization

In the Energy Management System, the measured variables, statuses and events in the entire in-house energy supply system are acquired, processed centrally and saved. They are presented graphically by the visualization facility and evaluated. The EMVIS 3000 software is a powerful tool for displaying and documenting all the measurement readings from the devices connected to the system. A client management function is available, which enables individual organizational system trees to be assigned to different users, who therefore receive exactly those data that they require for their separate purposes. There are two types of installation: either the single workstation or the server version, the latter with access to up to 5 clients simultaneously via a web browser, with no additional installation necessary in the client systems.

EMVIS 3000 comprises the following functional modules:

EMVIS 3000 Project

The project planning tool ...

- Unrestricted configuration and compilation of evaluations of all data processed by the system
- New functions such as alarm visualization, status, history, ranking
- Server version with access via browser
- User administration, the administrator defines user rights and accesses
- Calculation of **performance figures**
  Performance figures are virtual data points calculated from other data points, an arithmetic computation from measured or imported data, e.g.: “Active energy A x factor + Water quantity B x factor + Compressed air volume C x factor / No. of items D”
- Creation of **benchmarking** charts
  Benchmarking makes a direct comparison of measurement data or performance figures possible, e.g. energy costs of products or company sites
- Creation of **Sankey** diagrams
  A Sankey diagram gives a clear overview of any type of flow, e.g. the flow of utilities. The width of each stream into and out of a location is proportional to the quantity flowing, absolute and percentage values also being stated
- Easy Customizing – individual planning of views – simple and intuitive (the basic package includes 3 views with up to 20 online data points in total)

EMVIS 3000 Report

The reporting tool ...

- To simplify navigation, a clear overview of the entire system is displayed in two system trees, either of which can be selected:
  – **Physical:** standard evaluations of all the instruments and channels registered with the system
  – **Organizational:** all evaluations that have been compiled with EMVIS 3000 Project
- Presentation of historical data for analysis and comparison purposes, e.g. different locations or different periods of time
- For example diagrams showing the time course or diagrams without timeline such as **carpetplot, scatter diagram and heatmap**
- The historical data can be exported directly from the chart or consumption table for further processing. Possible export formats are CSV, Excel, Word and PDF
- Direct access to the momentary readings of the connected instruments

تسلاکالا
021-9102 6126 | teslakala.com

PQ Analysis

Visualization Software

- Visualization of the alarms occured is possible through display of the status, history and statistical evaluation in the ranking

EMVIS 3000 Live

- Views created individually – from site layout drawings right down to the distribution board
- Display of the momentary measurement readings and statuses

The EMVIS 3000 license enables the software to be installed on several PCs (server and clients). It allows access to the Power Quality Manager PQM and the Central Unit EMIS1500.

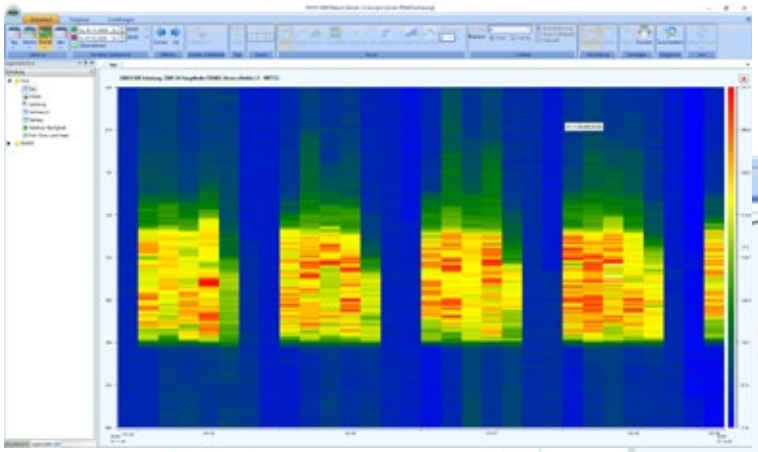

Carpetplot

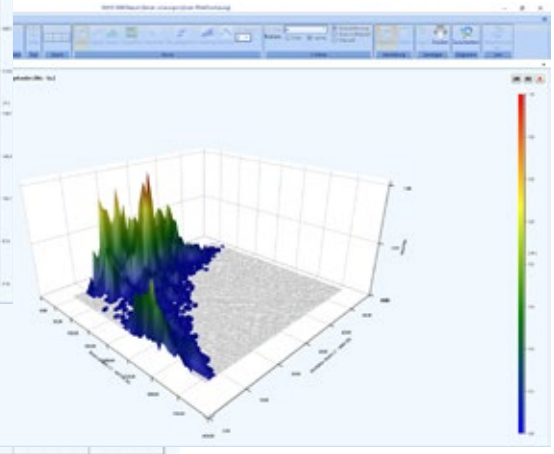

Heatmap 3-D

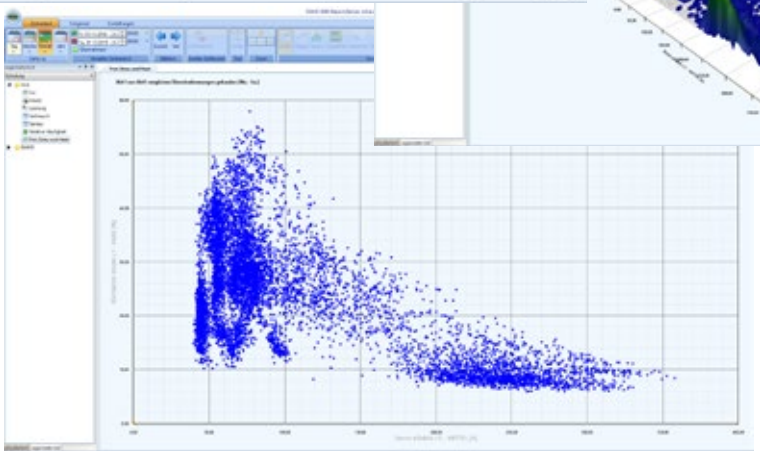

Scatter diagram 2-D



In the physical system tree prepared standard evaluations are deposited for all Energy Management devices. This allows the user to visualize the recorded historical data.

Subject to technical changes / © FRAKO GmbH / www.frako.com

تسلاکالا
021-9102 6126 | teslakala.com

PQ Analysis

Visualization Software

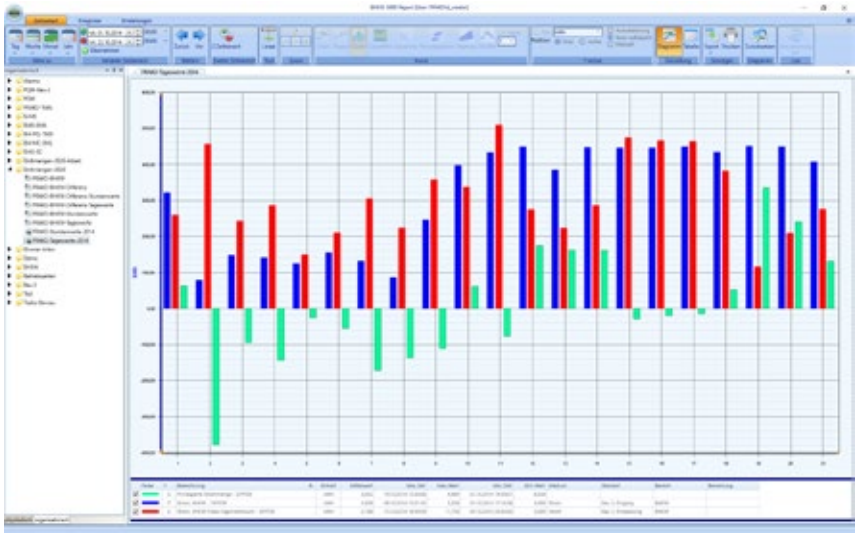

graphical representation
of energy differences

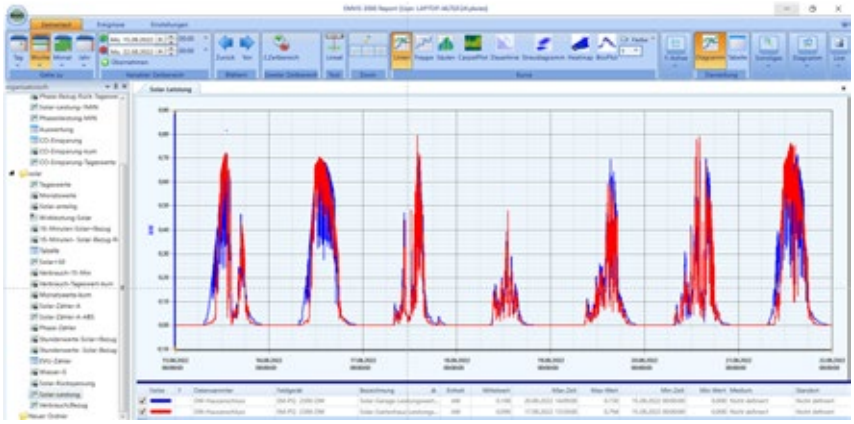

Sankey graphic – shows the
flow of energy

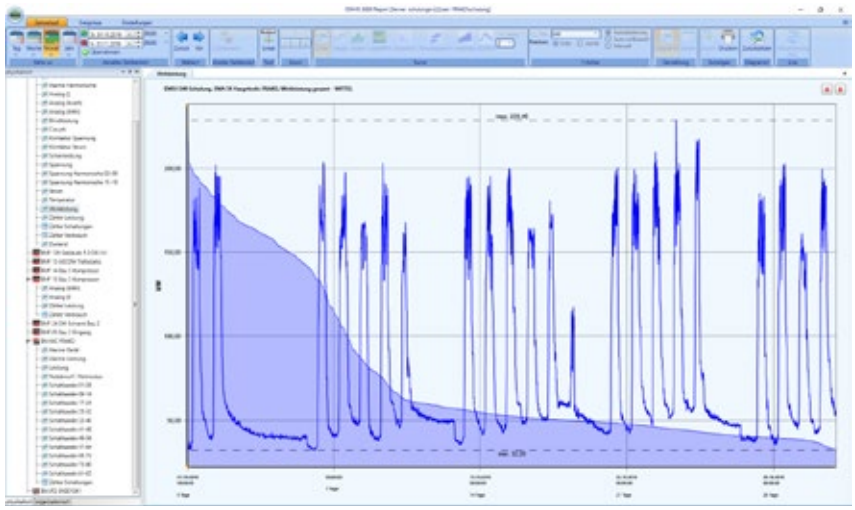

Continuous line graphic – shows the
frequency of the variables within a period
of time

تسلاکالا
021-9102 6126 | teslakala.com

PQ Analysis

Visualization Software



Standard evaluations for each energy management device are stored in the physical system tree, enabling the user to visualize the recorded and momentary measurement data without the need for individual configuration.



Within the organizational system tree business specific structures are deposited. The business specific structures are projected in form of individual evaluation in the organizational system tree by the customer.

Technical Data

PC requirements for small and medium systems	
Hardware	• Min. Intel Core I3-Processor • User memory: 4 GB RAM • 1 GB free hard disk space • Graphics adapter: min. DirectX 9.0c support and 512 MB video memory
Software	• Microsoft® Windows®* 7 • Microsoft® Windows®* 8 • Microsoft® Windows®* 10 • Microsoft® Windows®* Server 2008 R2 • Microsoft® Windows®* Server 2012 R2 • Microsoft® Windows®* Server 2016 • Microsoft® .NET Framework 3.5 • Microsoft® .NET Framework 4.5 • FRAKO-NET (min. V1.40.0056 or higher) • Firebird V2.5.0 (included in FRAKO-NET) * Registered trademark of Microsoft Corporation Please note: the server variant will only work with a 64-bit system
Article-No.	20-10649

EMVIS 3000 Extension packages

Article-No.	Type	Description
20-10650	EasyCustomizing-S	Individually designed views with up to 100 data points
20-10651	EasyCustomizing-M	Individually designed views with up to 200 data points
20-10652	EasyCustomizing-L	Individually designed views with up to 350 data points
20-10653	EasyCustomizing-XL	Individually designed views with up to 550 data points
20-10654	EasyCustomizing-XXL	Individually designed views with up to 1000 data points

EMVIS 3000 Software-Update

Article-No.	Type	Description
20-10555	EMVIS 3000 Software-Update	from version 3.0 to the latest version up to V3.XXX

Subject to technical changes / © FRAKO GmbH / www.frako.com

تسلاکالا
021-9102 6126 | teslakala.com

For example:
EM-System with 6 energy meters, arbitrarily expandable

1 x PQM
1 x 10 system points
6 x energy meters MID, ModBus RTU
incl. software EMVIS 3000, listed at BAFA for
the evaluation of energy data acc. to EN 50001

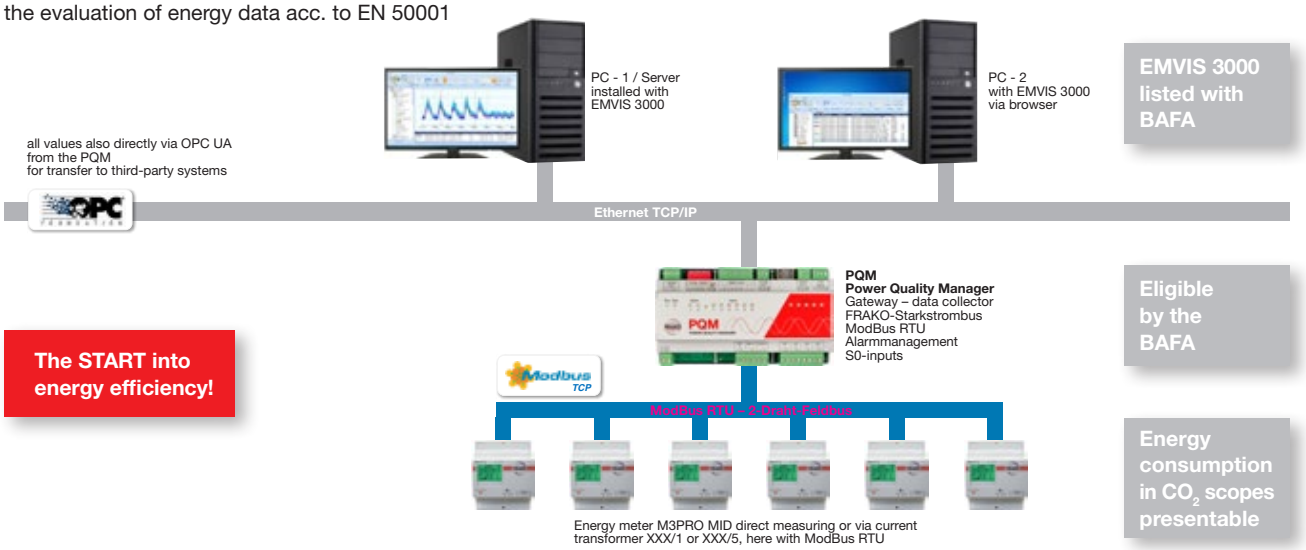

For example:
EM system with PQM as data collector, **PQM** as gateway,
ModBus RTU and TCP, FRAKO Starkstrombus and pulse inputs
(PQM and **EMF**), mains monitoring **PQA 1101**, power factor correction **PQC**,
energy meters with pulse outputs or ModBus.
System arbitrarily expandable.

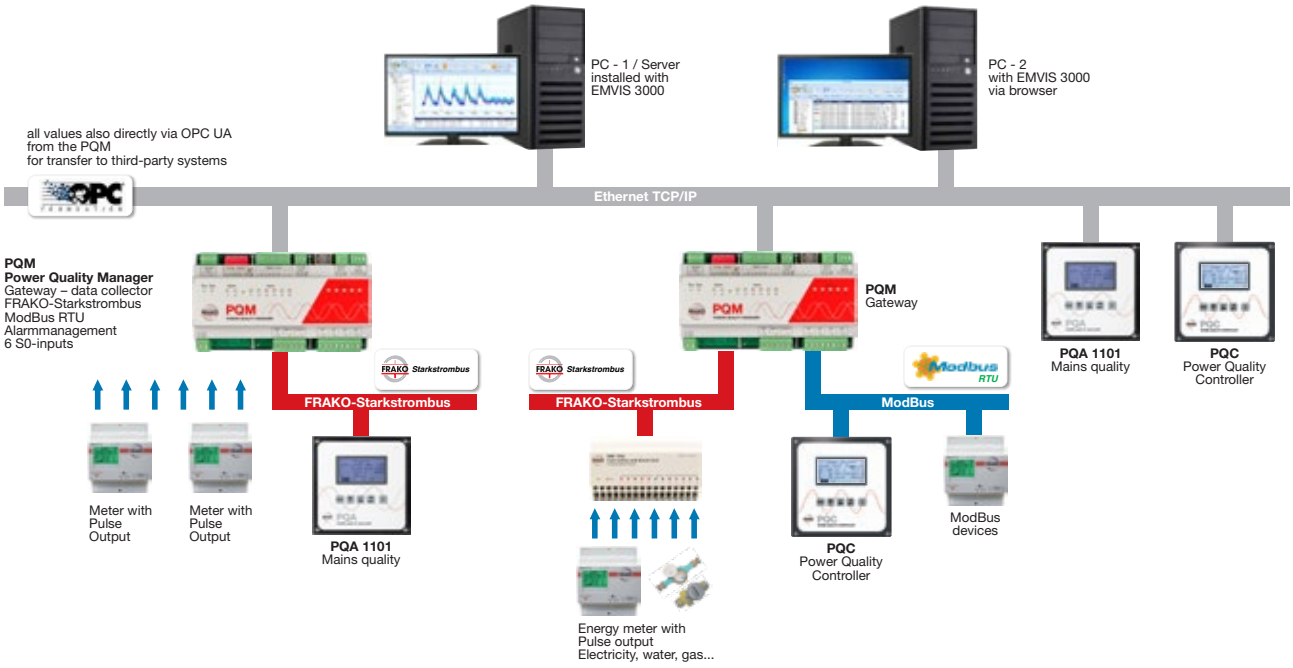

تسلاکالا
021-9102 6126 | teslakala.com

PQ Analysis

Visualization Software

For example:
EM system with PQM as data collector,
PQM as gateway, ModBus RTU and TCP;
Pulse inputs (PQM), mains monitoring **PQA 1101**,
energy meters with pulse output or ModBus.

System can be extended as required.

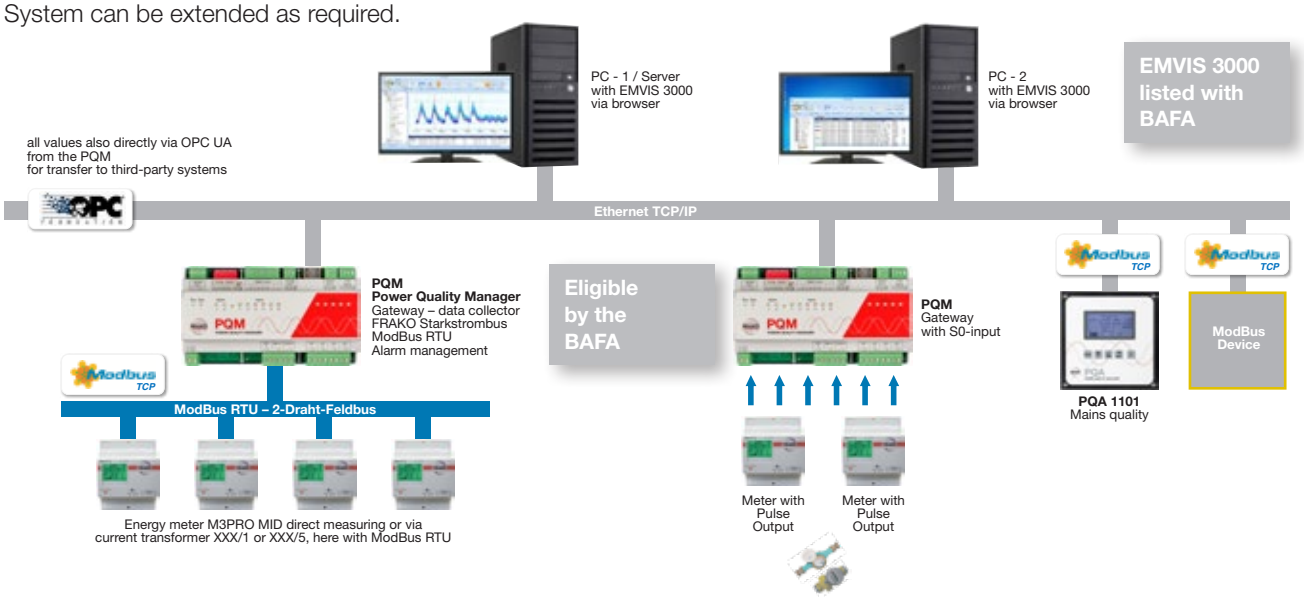

For example:
EM system with PQM as data collector,
PQM as gateway, ModBus RTU and TCP;
Pulse inputs (EMF 1102), mains monitoring **PQA 1101**,
energy meters with pulse output or ModBus.

System can be extended as required.

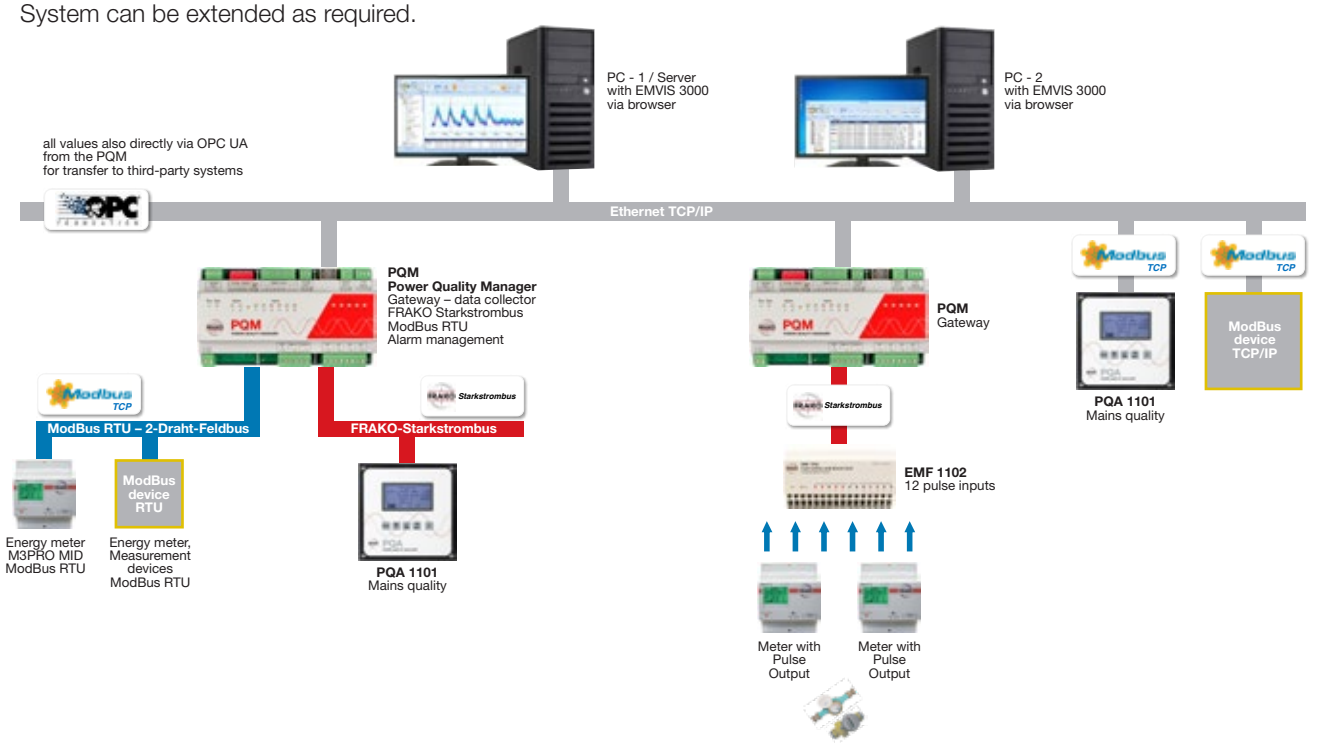

Subject to technical changes / © FRAKO GmbH / www.frako.com

تسلاکالا
021-9102 6126 | teslakala.com

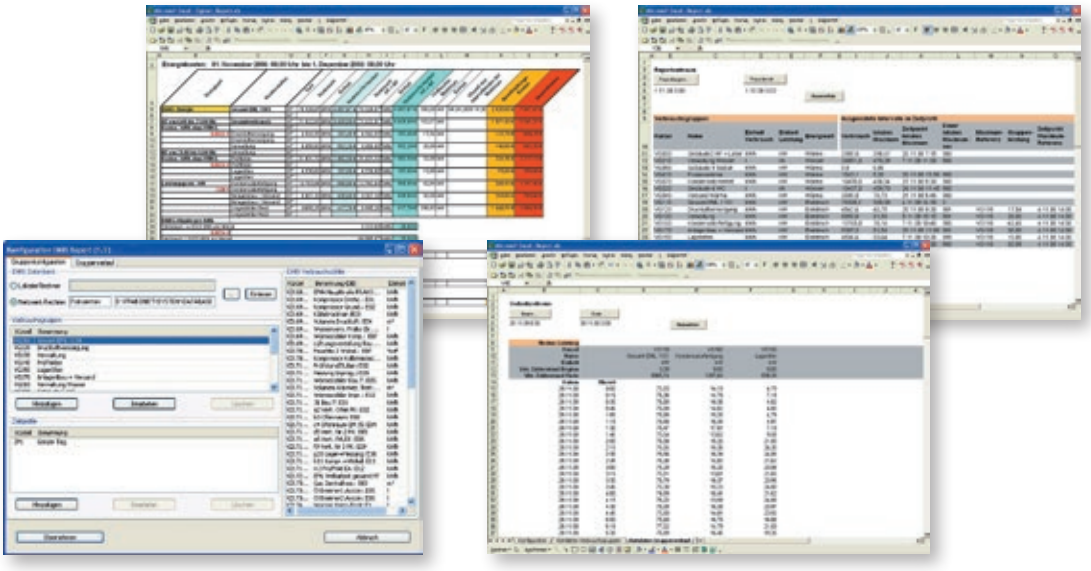

EMIS® Report
Software for Cost Centre Analysis

Energy analysis with EMIS® Report.
Software for automated analysis of energy consumption based on Microsoft® Excel*.
The consumption data recorded with the FRAKO Energy Management System can be imported to an Excel workbook from the SQL databases FRAKO-NET or FRAKO EMIS-DB.

The reporting period can be set as required.

Individual loads or metering units can be combined to load groups (e.g. cost centres) and evaluated with different time profiles. Customer-specific reports can easily be generated by linking to appropriate cells.
By means of that you achieve an optimum transparency of the energy flows within the company.

With EMIS® report, data from the FRAKO database can be imported to an Excel sheet and are available for a customer specific analysis. This makes it a very useful tool for the allocation of costs of the different company divisions and/or energy transfer media (electricity, gas, oil, etc.). It is also a useful data source for the financial controlling of a company.

Transparency of energy costs
- Assigning costs to the originators
- Transparency of all energy flows within the company
- Achieve the utmost efficiency
- Automatic evaluation through e-mail notification – also available as CSV-file

To achieve an optimized reduction of the energy costs it is essential to have information on how much energy was consumed when and where.

The knowledge of the energy consumption per cost centre is necessary to determine the potential for savings.

EMIS® Report provides a structured overview of the consumption of all types of energy of your company such as current, water, gas, compressed air etc. This enables you to financially evaluate those consumptions.

Individual loads or metering units can be combined into load groups or cost centres and evaluated according to different time schedules.

تسلاکالا
021-9102 6126 | teslakala.com

PQ Analysis

Software for Cost Centre Analysis

Thus, optimal transparency of energy flows is achieved in the company.
Functions:

- Automatic evaluation and notification by e-mail
- Period covered by the report is freely definable (date, day, etc.)
- Determination of consumption (kWh, l, m3, ...)
- Consumption peaks within the reporting period
- Time of maximum demand (e.g. kWh)
- Demand by a load or a load group at the time of peak consumption of a reference unit
- Interval values (e. g. 15 minutes) of the reporting period for consumption or consumption rate (e.g. kW)
- Sum of the interval values of the reporting period
- Evaluation according to different time profiles

Technical Data

PC requirements	
Hardware	• Pentium, min. 2 GHz clock frequency • User memory: min. 1 GB RAM • 6 GB free hard disk space • Ethernet 10/100 Mbit/s network connection or/and one free serial interface • CD-ROM drive • SVGA graphics adapter • Colour screen, minimum resolution: 1024 x 768 Pixel
Software	• Microsoft® Windows®* 7 • Microsoft® Windows®* 8 • Microsoft® Windows®* 10 • Microsoft® Windows®* Server 2008 R2 • Microsoft® Windows®* Server 2012 R2 • Microsoft® Windows®* Server 2016 • Microsoft® Excel* (from version 2000) • FRAKO-NET database * Registered trademark of Microsoft Corporation
Article-No.	20-10488

Optional Accessories

Article-No.	Type	Description
20-10494	Software expansion for EMIS® Report	Software update for cost centre and analysis software EMIS® Report

Subject to technical changes / © FRAKO GmbH / www.frako.com

تسلاکالا
021-9102 6126 | teslakala.com

PQ Analysis

Software for Cost Centre Analysis

تسلاکالا
021-9102 6126 | teslakala.com

Maximum Demand Control

Maximum Controller

Page 223

Display Unit

Page 229

Subject to technical changes / © FRAKO GmbH / www.frako.com

تسلاکالا
021-9102 6126 | teslakala.com



EM-MC 2200
Maximum Controller

The contemporary styling of the EM-MC 2200 Maximum Controller accentuates its user-friendly energy management technology. It reduces power demand peaks with new additional functions. The self-adapting target demand function provides dynamic adjustment to the site's monthly operating characteristics. Reducing target demand at the beginning of the accounting period, together with automatic self-adaptation, enables additional savings to be made in months with lower demand peaks.

Designed to work as a stand-alone unit, the EM-MC 2200 is the ideal solution for small to medium-sized industrial and commercial operations, office buildings and hotels. With the FRAKO Starkstrom-bus or an ethernet interface it can be integrated into a FRAKO Energy Management System.
Switching off loads by intelligent terminals (Modbus over IP) or timers is only one of the helpful new features of the EM-MC 2200.
This is an investment with a short payback time even in the deregulated energy market, since exceeding the specified power peak limit still results in extra costs that can be avoided.

Description

Special contract customers whose demand exceeds the agreed maximum (subscribed demand) will face increased costs through entering a higher demand category.

Do you know how many measurement intervals there are in a year?

There are some 35 000 measurement intervals in a year, or about 2 900 in a month. As a rule, the calculation determining the price paid for power in a given month is based on the measurement interval with the greatest demand in that month.
The Maximum Controller EM-MC 2200 can help you to stay within the set limits, since this unit cuts demand peaks by shedding those loads assigned a low priority or not considered absolutely essential. Loads are switched off for a short time whenever the subscribed demand appears likely to be exceeded. An individual order of priorities for switching loads off ensures that normal operation can continue without disruption despite this load shedding. The result: Instead of having to pay a higher maximum demand charge, the subscribed demand can even be reduced – and thus save costs!

The modular construction of the EM-MC 2200 makes it both simple and inexpensive to install. It is upgradable at any time by software updates and connecting local EMD 1101 add-on units.

Operation is of proven simplicity with a clear, menu-driven operator dialogue in plain language at the EM-FD 2500 display or by accessing the instrument from a PC.

The scope of supply includes the Device Manager software. This is used to enter and modify parameters and to display—or when needed print out—daily demand curves, load operating times and all basic and load-specific settings.

- Control of demand to limit the average power consumption in a

تسلاکالا
021-9102 6126 | teslakala.com

given interval to the set target demand. This is achieved by temporarily switching off individual loads
- Monitoring of demand peaks: if demand is too high, loads are immediately switched off to prevent the circuit breaker tripping
- Power-dependent control application point to prevent unnecessary load shedding at the start of the measurement
- Individual adjustment of the connected loads to suit operating conditions by setting priorities, min./max. OFF times and min. ON times per channel
- 4 profiles can be activated. Target demand and peak power, together with the load parameters priority, power, min./max. OFF times, min. ON times and priority type (time or power priority), can be set for each profile
- To make best use of seasonal demand fluctuations, the self-adapting target demand adjusts itself dynamically to suit the operating conditions of the month concerned. Reducing the target demand at the beginning of the accounting period combined with automatic self-adaptation makes additional savings possible in months with low peak loads
- Formation of switching channel groups for strict compliance with the set priorities
- 'Traffic light' function: 3 switching channels can be used for signal lamps as a visual guide to demand conditions
- Emergency load-shedding mode for keeping within maximum demand even with critical load constellations
- Connection of any desired Modbus TCP device with digital outputs to switch off loads (e.g. WAGO fieldbus controller with I/O terminals, SIEMENS PAC4200 with DI/DO module, plus many more).
  It is a prerequisite that the function codes 5 or 6 are supported.
- Timer for switching loads to a time schedule or to set time-scheduled target demands or profiles
- Storage of the following data in a ring memory:
  – Average values per interval over 20 000 intervals including the target power applicable at the end of the interval and time stamp
  – Daily maximum values over 500 days including time stamp
  – Monthly maximum values over 48 months
  – 10 000 switching cycles
- Configuration and presentation of momentary and historical measurement readings using the Device Manager software (included in scope of supply)
- Display of measurement readings and the power factor triangle (trend curve) via an integrated web interface or an EM-FD 2500 display, an optional graphic display instrument connected to the EM-MC 2200 Maximum Controller by a 4-core cable. Up to 7 additional EM devices can be viewed on one EM-FD 2500 display.

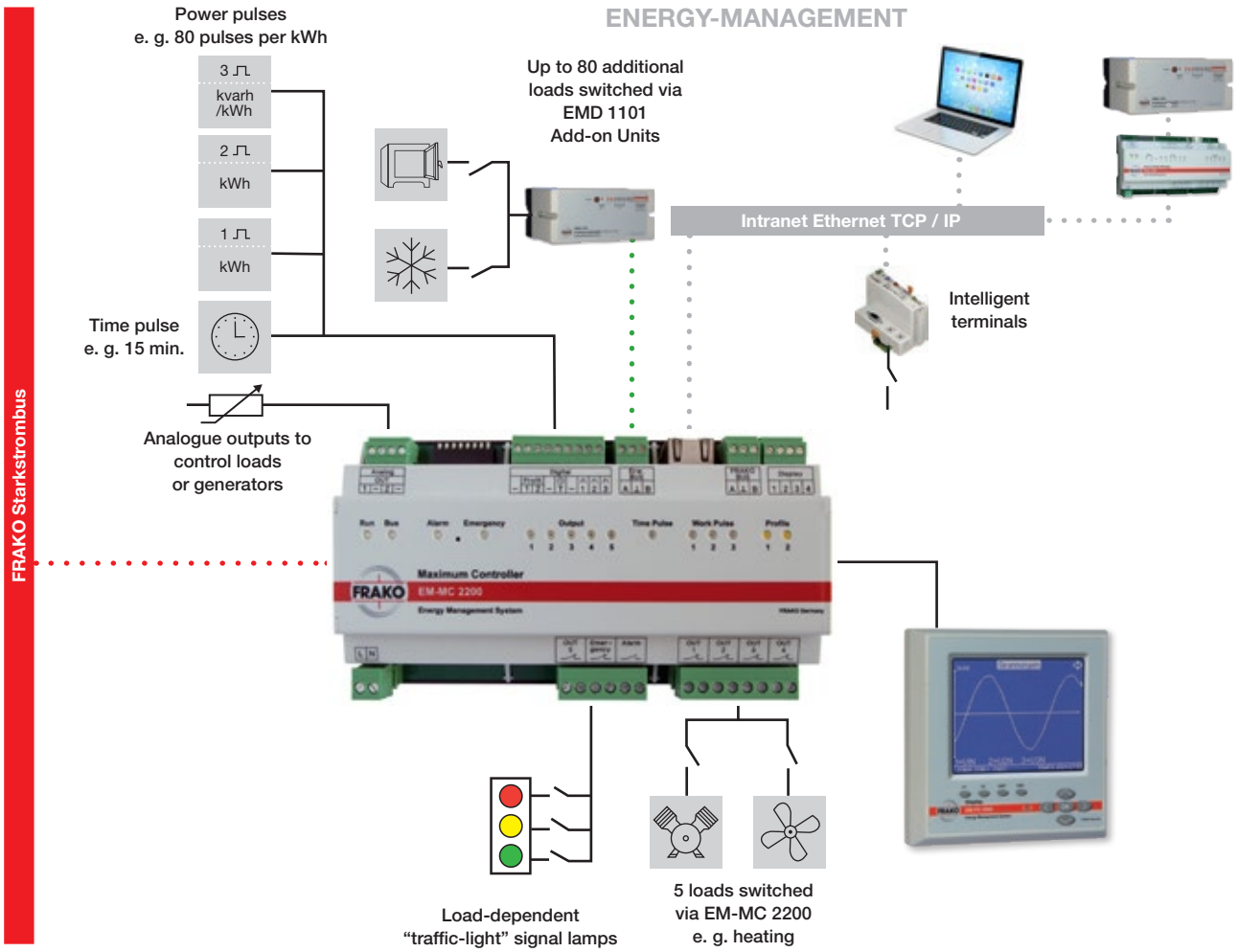

Subject to technical changes / © FRAKO GmbH / www.frako.com

تسلاکالا
021-9102 6126 | teslakala.com

Maximum Demand Control

Maximum Controller

- **Inputs:**
  - 3 inputs for active energy pulses or 2 for active and 1 for reactive energy pulses. These can be added, subtracted or used as meters. The self-adapting target demand function can be reset via a volt-free contact
  - 1 input for time pulse; interval duration adjustable from 1 to 1 440 minutes
  - 2 inputs for activating the 4 profiles. These adjust the target demand and/or the settings of the connected loads to suit site-specific factors such as regular and off-peak tariffs. Profile switching can be by the internal timer or an input to the EMF 1102 Cost Centre and Alarm Unit

- **Outputs:**
  - 5 switching and 1 emergency load-shedding channel in the basic instrument (decentralized extendability: up to 85 switching channels possible by means of EMD 1101 add-on units, each with 8 relay contacts)
  - 1 alarm contact to signal faults (alarm signal also possible at any desired output)
  - 2 analogue outputs for 2 measurement readings (momentary, trend, target or corrective power, capacity utilization or remaining time) as 0/4–20 mA or 0–10 V signals, or for infinitely variable control of loads; fed by internal power supply

- **Interfaces:**
  - RS-485 bus, FRAKO Starkstrombus protocol to connect to the FRAKO Energy Management System
  - RS-485 extension bus to connect EMD 1101 add-on units
  - Ethernet (RJ 45 jack) with the following functions:
    - Communication with the EMD 1101 add-on unit or the EMF 1102 Cost Centre and Alarm Unit via the PQM
    - Output of switching commands also via Modbus TCP
    - Communication with the PQM Central Unit
    - Communication with the configuration software at the PC

- The software (Device Manager) for configuring and displaying the saved measurement readings via Ethernet is included with the instrument

Easy installation with the DIN rail-mounted enclosure

The EM-MC 2200 is housed in an enclosure with a pin strip underneath it.

This system, consisting of pin and socket strips and DIN rail bus connectors, enables the individual modules to be easily fitted and connected to one another.

All connections are also available at external terminals for conventional wiring. Use of the 16-pin DIN rail bus connector provides automatic contact from instrument to instrument.

The bus connector enables the FRAKO Starkstrombus, extension bus and display bus to be connected. The pin and socket strips on the DIN rail ensure quick and easy installation of the instruments in parallel.

It is possible to plug individual instruments in or remove them without dismantling the modular assembly.



تسلاکالا
021-9102 6126 | teslakala.com

Data display on the EM-FD 2500

The EM-FD 2500 display has been developed as a physically separate LCD display and operator panel to work with all FRAKO Energy Management devices of the new generation that require this, such as the EM-PQ 2300 and EM-MC 2200 instruments. The display is connected to the EM instrument via 4 terminals: two wires for the instrument power supply and two for data transfer. A maximum of 8 instruments can be connected to a common display bus, with a bus length of up to 40 m to the display. The display is mounted on the control cabinet door or wall through a Ø 22.5 mm hole, thus greatly simplifying installation. Its orientation is fixed by a screw through the wall into a threaded bush. Alternatively, the display can also be mounted in any available 144 x 144 mm cut-out. For this purpose suitable adapters are available.

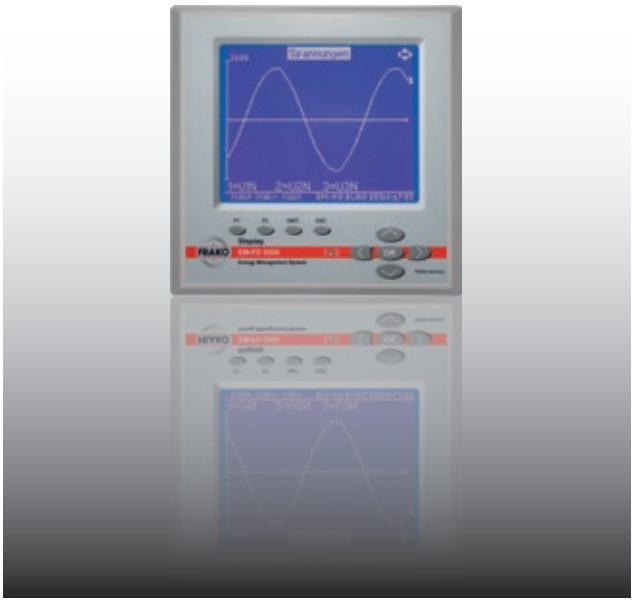



Data display via the integrated web interface

- Web server for the configuration and online display of all measurement readings
- Each user at any PC can view the most important measurement data via the intranet.

Device Manager – Clear overview and straightforward programming

- **Configuration**
  Configuration of the EM-MC 2200 is divided into two areas termed setting and configuration to distinguish them:
  – **Setting:**
  Setting covers all those adjustments that are necessary when commissioning the instrument itself or introducing add-on units.
  – **Configuration:**
  Configuration covers those adjustments that may have to be changed during ongoing operation.

  The loads can be configured in a table giving a clear overview. Settings for the individual profiles can be hidden, if desired, to simplify this overview. Channels can be copied and their settings adopted in total or per channel for all profiles.

- **Trend display**
  Device Manager is a convenient tool for displaying real-time parameters such as momentary power, cumulative power, the remaining time in the current measurement interval and the power triangle. In addition, the statuses of the loads, the current profile (regular/off-peak tariff) and the limit settings are displayed. Any alarms or faults present are immediately apparent.

Subject to technical changes / © FRAKO GmbH / www.frako.com

تسلاکالا
021-9102 6126 | teslakala.com

Maximum Demand Control

Maximum Controller

- **Switched status log**
  The switched status log offers a graphical display of the last 10 000 changes in the switched status of up to 85 controlled switching channels.

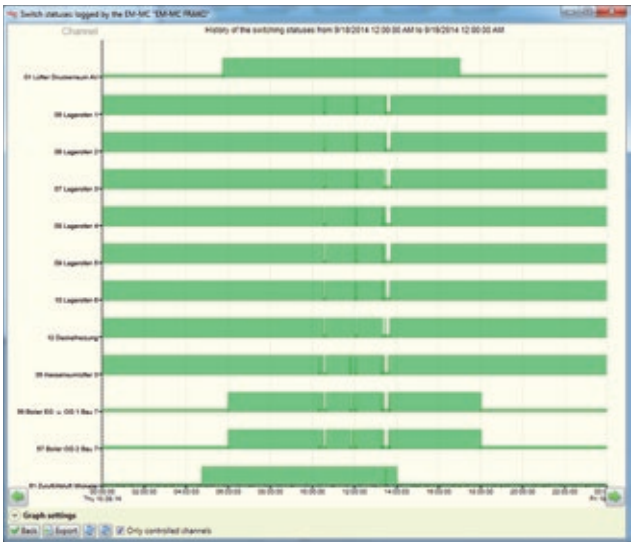

- **Documentation**
  The power demand in every measurement interval over the past 200 days is displayed as a chart and documented. Similarly, the demand peaks of the past 500 days and the past 48 months are saved, as are the switched statuses of up to 10 000 switching cycles. It is also no problem to export these recorded data to a spreadsheet program such as Excel.



- **Timer**
  A weekly timer function is incorporated in the EM-MC 2200. This makes up to 400 switching times available, in order to change the status of switching channels to ‘Permanently ON’, ‘Permanently OFF’ or ‘Controlled’ at scheduled times. In the ‘Controlled’ condition, the EM-MC 2200 controls the actual condition of the load through the target demand control function and the peak demand monitoring function.

  In addition, the profile and the target demand can be controlled by the timer.

Technical Data

Power supply	
Supply voltage	100 V – 253 V AC or 100 V – 230 V DC
Frequency	45 up to 65 Hz
Power consumption	7 W / 18 VA
Overcurrent protection	Max. 2 A external fuse required
Inputs	
General	• S0 interfaces (DIN 43864) to connect volt-free contacts • Voltage with contact open: 15 V • Max. line resistance: 800 Ohm • Short circuit current: 18 mA • Pulse frequency: 0.1 to 20 Hz
3 Pulse inputs	To acquire the power data from 3 meters with pulse outputs. Input 3 can also be used for the acquisition of reactive power data.
1 Time pulse input	1...1 440 minutes
2 Profile switch inputs	To select from 4 profiles

Measurement data storage	
	256 MB onboard flash memory
Outputs	
5 Relay contacts (switching channels)	Bistable, 250 V / 2 A AC or 30 V / 2 A DC
1 Relay contact (emergency load shedding)	Bistable, 250 V / 2 A AC or 30 V / 2A DC
1 Alarm contact	NC 250 V / 2 A AC or 30 V / 2 A DC
1 Extension bus interface	• To connect up to 10 EMD 1101 • Modbus TCP output instruments (fieldbus instruments, function code 5)
2 Analogue outputs	0-10 V / 0-20 mA / 4-20 mA + Steuerung-Verbraucher
‘Traffic light’ signal lamps	Visual guide to demand conditions

تسلاکالا
021-9102 6126 | teslakala.com

Technical Data

Interfaces	
1 FRAKO Starkstrombus interface	To connect to the FRAKO Energy Management System
1 Display bus interface	Optional connection of to up to 2 external EM-FD 2500 display instruments
Web server / E-mail / SNMP	• / • / •
Display and operation, connections	
User interface Art.-No. 20-30240	Operation via external EM-FD 2500 display instrument
Alarm system	•
Timer function	•
Annunciators	15 LEDs
Connections	Pin and socket strips; max. core cross section: max. 1.5 mm²
Mechanical construction	
Dimensions	161.6 x 89.7 x 60.5 mm (W x H x D)
Ingress protection	IP30 (enclosure), IP10 (terminals)
Weight	Approx. 0.4 kg
Protection class	Class II according to EN 61010
Enclosure	Flame retardant UL 94-V0
Mounting	On standard 35 mm DIN rail according to EN 50022
Operating conditions	
Ambient temperature	0 °C up to +45 °C
Article No.	20-20071

Technical Data

PC requirements to run Device Manager	
Hardware	• PC: CPU mit with at least 2 GHz • 1 Gbyte RAM • 200 Mbyte free hard disc space
Software	• Microsoft® Windows®* XP, SP 2 with installed .NET-Framework 3.5 • Microsoft® Windows®* 7 (32 or 64 Bit) • Microsoft® Windows® 2008 Server R2 * Registered trademark of Microsoft Corporation

Dimensions

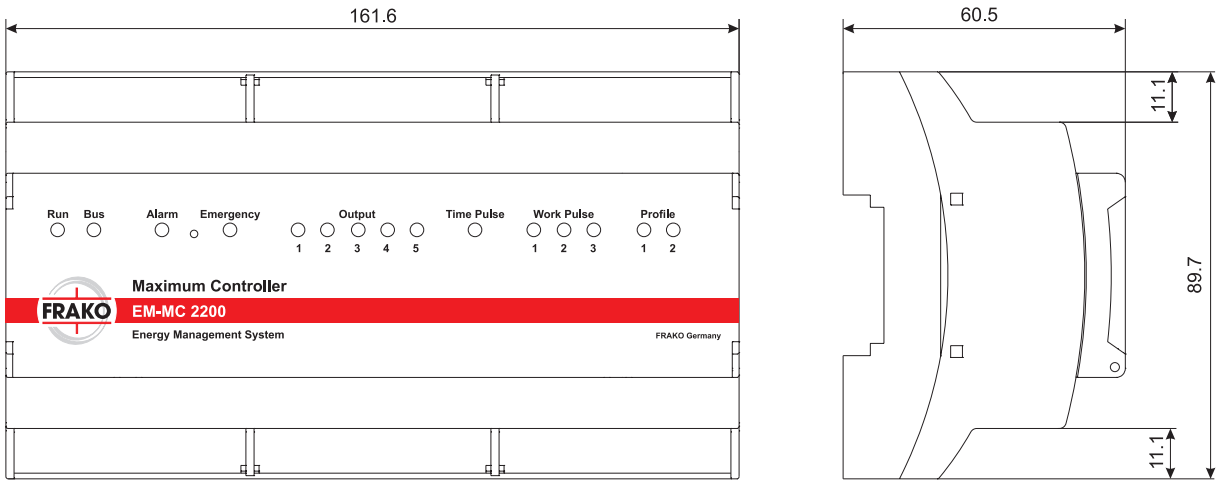

All dimensions in mm

Subject to technical changes / © FRAKO GmbH / www.frako.com

تسلاکالا
021-9102 6126 | teslakala.com

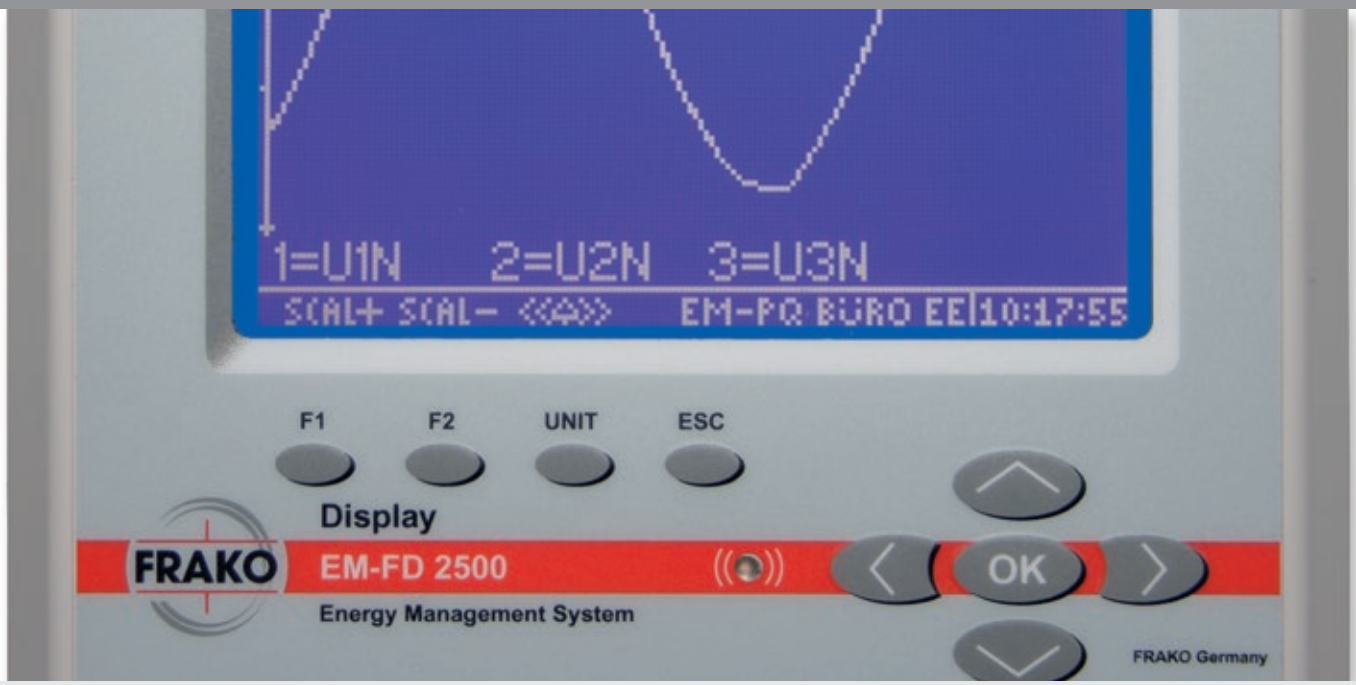

Display Unit

The monitoring of currents, harmonics, temperatures, etc. has now become standard practice to uphold supply network quality. The FRAKO Starkstrombus and the other components of the system form a powerful energy information system. All data are available centrally.

	EM-FD 2500
	
Voltage	supplied via EM device
Frequency	-
Power consumption	Max. 3 VA
Operating-/display element	9 buttons / bright LC display / 1 LED
Interfaces	
CAN-Bus	•
RS-232 / RS-485	-
Connection with	EM-MC 2200 EM-PQ 2300

تسلاکالا
021-9102 6126 | teslakala.com

Subject to technical changes / © FRAKO GmbH / www.frako.com

تسلاکالا
021-9102 6126 | teslakala.com

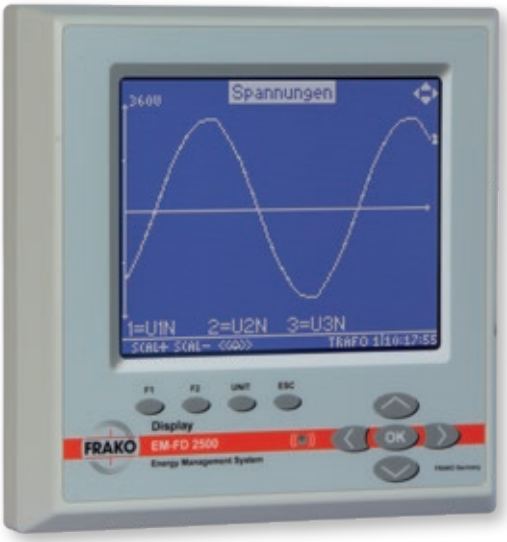

EM-FD 2500
Display Unit

The EM-FD 2500 is a graphic display in DIN rail housing to display measurements and wave forms of up to 7 Energy Management devices of the latest generation (e.g. Maximum Controller EM-MC 2200 or Mains Monitoring Unit EM-PQ 2300).

Description

- Front mounting of the display with little effort by a Ø 22.5 mm fixing and a screw to prevent rotation
- Only one cable (4-pin) from the display to the EM device
- Connection of max. 8 EM devices via display bus:
  - 1 display + 7 EM devices
  - 2 displays + 6 EM devices

تسلاکالا
021-9102 6126 | teslakala.com

Technical Data

Power supply	
Voltage	11 V up to 16 V DC, reverse polarity protection, power is to be connected by the EM device
Fuse protection	Internal via 500 mA SMD fuse
Power consumption	Max. 3 VA
Connections	Via plug-in terminals
Conductor cross-section	Max. 1.5 mm²
Interfaces	
Display bus	CAN according to ISO 11898, RS-485, impedance level 120 Ohm Transfer rate: 1 Mbit/s Length of bus: max. 40 m
Mechanical construction	
Dimensions	147 × 147 × 53 mm (W × H × D) including connector, cabinet overhang 23 mm, depth cabinet max. 30 mm, including connector
Ingress protection	Front panel IP54 when using the enclosed sealing mat, housing front IP50 without sealing mat, terminals and terminal area IP20, degree of pollution 3, all data according to DIN EN 60529
Installation	In the front panel / door through a central hole Ø 22.5 mm and a hole for anti-turn locking , Ø 3.5 mm
Version	Insulated housing, Protection class 3 (SELV), working voltage up to max. 16 V
EMV	EMV according to EN 61326 -1, EN 61000-4-2 electrostatic discharge air 8 kV and conductive 4 kV with horizontal and vertical coupling plate, EN 61000-4-3 EMS radiated 80 MHz – 1GHz, horizontal and vertical, level 10 V/ m = irradation industries Class B, EN 61000-4-4 Burst 1 kV capacitive on cable, EN 55022A EMI 30 MHz – 1 GHz = irradation residential area Class A
Weight	330 g
Operating conditions	
Temperature range	0 °C up to +60 °C, no dewing
Installation height	Geographical height max. 2000 m
Article-No.	20-30240

Optional Accessories

Article-No.	Type	Description
20-30242	Adapter plate for EM-FD 2500	Adapter for installation of the EM-FD 2500 in a cabinet opening (138 x 138 mm)

Subject to technical changes / © FRAKO GmbH / www.frako.com

تسلاکالا
021-9102 6126 | teslakala.com

تسلاکالا
021-9102 6126 | teslakala.com

System Components

Repeater

Page 235

Cost Centre and Alarm Unit

Page 237

Switching Module

Page 239

Electronic Energy Meter

Page 241

Acquisition of Process Data

Page 247

Subject to technical changes / © FRAKO GmbH / www.frako.com

تسلاکالا
021-9102 6126 | teslakala.com



EMB 1101
Repeater

The repeater EMB 1101 is designed to process and distribute signals in the FRAKO Starkstrombus. It is necessary to use a repeater for lines with a length of over 1000 m and for bus systems where more than 32 instruments are served by one line. The EMB 1101 also allows to realize star topology.

Description

- Device for conditioning and distribution of signals
- Up to 120 instruments can be operated in a bus system
- The repeater is necessary for lines with a length of over 1000 m and for bus systems where more than 32 instruments are served by one line
- Installing the repeater improves the reliability of the bus system, especially under difficult operating conditions that cause interference
- Star wiring system; up to four lines, each connected to a maximum of 32 instruments, can be wired to one repeater
- Cascading repeaters enables bus lenghts of up to 15 km to be installed
- Existing cable connections, which do not use a bus cable specified by FRAKO, can be used for distances of up to 4 km
- The repeater can electrically isolate sections of the bus system in order to prevent stray currents flowing in the FRAKO Starkstrombus
- In case of an electrical error in the connected lines, the error will be automatically detected and displayed, and the corresponding line will be closed
- Data transmission errors are automatically detected and signalled by an LED

تسلاکالا
021-9102 6126 | teslakala.com

Description

- Device for conditioning and distribution of signals
- Up to 120 instruments can be operated in a bus system
- The repeater is necessary for lines with a length of over 1000 m and for bus systems where more than 32 instruments are served by one line
- Installing the repeater improves the reliability of the bus system, especially under difficult operating conditions that cause interference
- Star wiring system; up to four lines, each connected to a maximum of 32 instruments, can be wired to one repeater
- Cascading repeaters enables bus lenghts of up to 15 km to be installed
- Existing cable connections, which do not use a bus cable specified by FRAKO, can be used for distances of up to 4 km
- The repeater can electrically isolate sections of the bus system in order to prevent stray currents flowing in the FRAKO Starkstrombus
- In case of an electrical error in the connected lines, the error will be automatically detected and displayed, and the corresponding line will be closed
- Data transmission errors are automatically detected and signalled by an LED

Technical Data

Power supply	
Supply voltage	60 V - 230 V + 15 % AC or DC
Frequency	If AC: 48 up to 62 Hz
Power consumption	Approx. 6 VA
Fuse protection	Max. 2 A external prescribed
In- / Outputs	
Quantity	4 lines, thereof 1 line galvanically separated
Protocol	FRAKO Starkstrombus, according to EN 50170 (P-Net), standardized fieldbus, RS-485; transfer rate: 76.8 kbit/s
Display elements	
Operating (Run)	One blinking green LED
Data transfer	One green and red LED per line
Connections	Screw terminals Wire cross-section: max. 2.5 mm²
Mechanical construction	
Dimensions	140 x 90 x 59 mm (W x H x D), DIN module case 8 HP
Ingress protection	Housing IP40, terminals IP20
Version	According to VDE 0411 protection class II (also DIN EN 61010-1)
Housing	PC with 10 % GF, V-0, flammability to UL-94 V-0
Installation	On standard rail 35 mm according to DIN EN 50022
Mounting position	Optional
Weight	Approx. 0.6 kg

Operating conditions	
Ambient temperature	0 °C up to +50 °C
Article-No.	20-10600

Dimensions

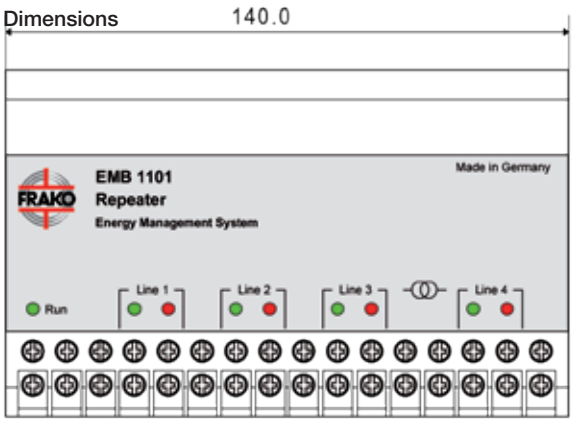

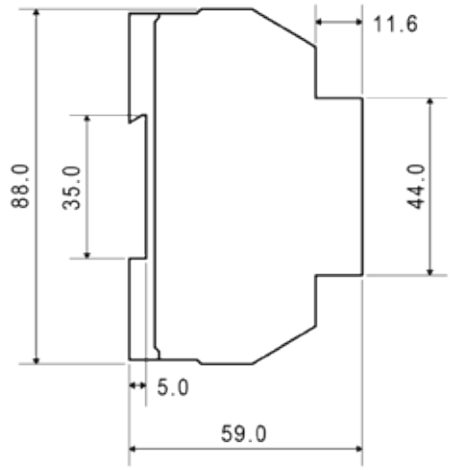

Dimensional drawing EMB 1101

All dimensions in mm

Subject to technical changes / © FRAKO GmbH / www.frako.com

تسلاکالا
021-9102 6126 | teslakala.com



EMF 1102
Cost Centre and Alarm Unit

The EMF 1102 is a compact and cost-effective system for the aquisition of meter readings, switching status and alarm signals.

Description
It consists of a data acquisition and memory unit plus modular software components for easy user configuration and for the evaluation and management of the data.

Data acquisition for all types of utility such as electricity, water, gas, compressed air or meter pulse inputs via an S0 interface (= digital inputs).

- Calculation of power, energy and flow rates
- Monitoring of power, energy or flow rate with high and low alarm settings
- Determination of running time and downtime for each channel (running time meter)
- Operating cycle counter
- Monitoring of running times and downtimes with alarm settings (e.g. to detect instrument failure)
- Monitoring of key operating conditions
- Connection optionally with RS-232 interface adapter (optional) or via COM server directly to PC – or via FRAKO Starkstrombus to the PQM
- Option of visualising and evaluating the meter data via the FRAKO Energy Management System software module (EMVIS 3000)
- Option of displaying, configuring and evaluating the recorded data via the PC by means of the EMF-SW cost centre and alarm software EMF-SW (optional)

تسلاکالا
021-9102 6126 | teslakala.com

Technical Data

Power supply	
Mains voltage	230 V AC +/- 10 %
Frequency	45 to 65 Hz
Power consumption	Approx. 10 VA
Inputs	
General	S0-Interfaces (DIN 43864) for connection of potential-free contacts, common 'E-'-Potential switching time: >= 25 ms Voltage with open contact: 12 V DC +/- 10 % Short circuit current: 12 mA +/- 10 %
12 Pulse Inputs	Pulse frequency: max. 20 Hz Internal shifter shafts: 'Off' at approx. 3 mA, 'On' at approx. 7.5 mA
Outputs	
1 Voltage output	12 V DC, max. 50 mA
Interfaces (mode can be selected)	
1 FRAKO Starkstrombus	For connection to FRAKO Energy Management System, according to EN 50170 (P-Net), standardized fieldbus, RS-485 Transfer rate: 76.8 kbit/s
RS-232 Interface	Optional via RS-232 Adapter direct connection to PC Tranfer rate: 19 200 Baud
Display elements	14 LEDs
Connections	Screw terminals Conductor cross-section: max. 2.5 mm²
Mechanical construction	
Dimensions	140 x 90 x 59 mm (W x H x D), DIN module cases 8 HP
Ingress protection	Housing/Terminals IP40/20
Version	Protection class II according to VDE 0411 / DIN EN 61010-1
Housing	flame retardant UL94-V0
Installation	on standard rail 35 mm according to DIN EN 50022
Mounting position	Optional
Weight	Approx. 0.6 kg
Operating conditions	
Ambient temperature	0 °C up to +60 °C
Article-No.	20-40005

Optional Accessories

Article-No.	Type	Description
20-10310	EM-RS 232	RS-232 Adapter for direct access via PC to the data of EMA 1101 (SW-Version 1.11*), EMR 1100 (SW-Version 1.95*) and EMF 1102 (SW-Version 1.0*)
20-10309	EM-RS 232 for modem operation	RS-232 Adapter for direct access via PC to the data of EMA 1101 (SW-Version 1.11*), EMR 1100 (SW-Version 1.95*) or EMF 1102 (SW-Version 1.0*) via modem
20-10319	Registration license EMF 1102	License allows EMVIS 3000 access to a Cost Centre and Alarm System EMF 1102, if this is logged by using a virtual data collector.
20-10313	EMF-SW	Display, analysis and configuration software for Cost Centre and Alarm System EMF 1102. Access via: PQM and RS-232 adapter. **Note:** included in scope of delivery of FRAKO-NET (for CD delivery)

* or higher

Dimensions

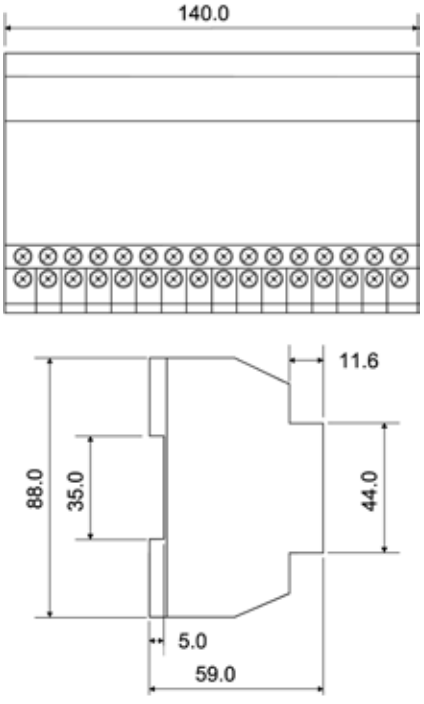

Dimensional drawing EMF 1102 All dimensions in mm

Subject to technical changes / © FRAKO GmbH / www.frako.com

تسلاکالا
021-9102 6126 | teslakala.com



EMD 1101
Switching Module

Switching module with 8 switching channels for connection to the extension bus or the FRAKO Starkstrombus.

The extension module with 8 switching channels can be connected selectively to:

- Maximum Controller EM-MC 2200 or Maximum Demand Controller EML 1101
- System Timer EMT 1101 via FRAKO Starkstrombus

Description

- Display of the switching status via LED
- LED display for bus access
- Definition of the switching status (on/off) of the individual switching channels in case of a failure.

تسلاکالا
021-9102 6126 | teslakala.com

Technical Data

Power supply	
Mains voltage	230 V AC -15 % up to +10 %
Frequency	45 up to 65 Hz
Power consumption	4 VA
Fuse protection	Max. 2 A external prescribed
Outputs	
8 switching channels	Normal open contact 250 V AC / 4 A
1 extension bus / FRAKO Starkstrombus	2-wire-fieldbus, RS-485
Operating elements	8-fold DIP switching series, 10-level rotary switch
Display elements	9 LEDs
Connections	Via plug-in connector blocks within housing; conductor cross-section: max. 2.5 mm²
Mechanical construction	
Dimensions	158 x 75 x 120 mm (W x H x D)
Ingress protection	IP40
Version	Protection class 2 according to DIN EN 61010
Housing	Flammability to UL94-V0 (according to the manufacturer)
Installation	Screw mounting or on standard rail 35 mm according to DIN EN 50022
Weight	Approx. 0.8 kg
Operating conditions	
Ambient temperature	0 up to +45 °C
Storage temperature	-20 up to +60 °C
Article-No.	20-21002

Dimensions

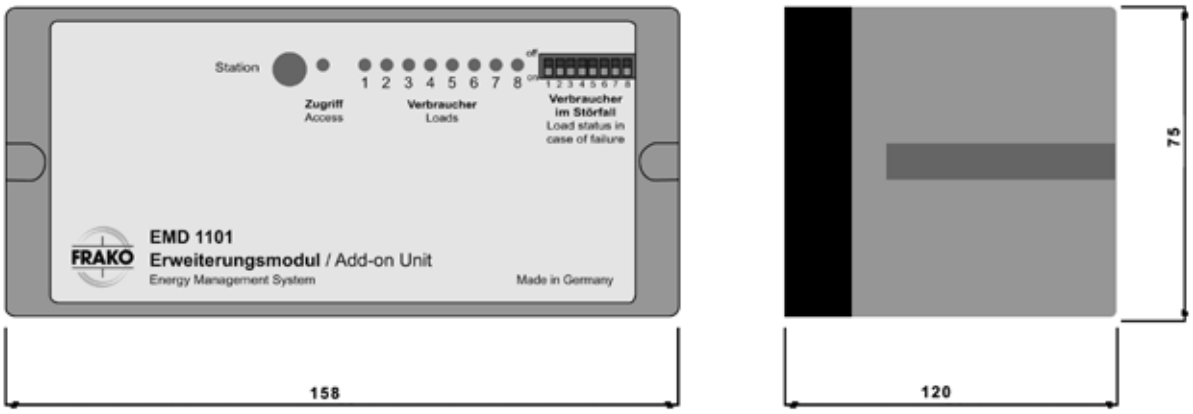

Dimensional drawing EMD 1101

All dimensions in mm

Subject to technical changes / © FRAKO GmbH / www.frako.com

تسلاکالا
021-9102 6126 | teslakala.com



M3PRO 80 MID, M3PRO 80 MID M-Bus, M3PRO 80 MID ModBus, M3PRO 1-5 MID, M3PRO 1-5 MID M-Bus, M3PRO 1-5 MID ModBus and IME Conto D4

Electronic Energy Meter

Electronic energy meter for measuring active and reactive energy.

Description

Electronic energy meters for measuring active and reactive energy, available with direct measurement or for operation with voltage/ current transformer. Impulse outputs for active and reactive energy or regenerated active energy. Depending on the type of meter, electrical parameters such as I, V, F and PF as well as P, Q, S will be displayed. Data transmission via additional communication modules is possible.

تسلاکالا
021-9102 6126 | teslakala.com

Type		IME Conto D4Pt-CE4DT12A2	M3PRO 80 MID
Technical data			
Article No.		29-20155	29-20170
Measurement	active energy / reactive energy consumed	• / •	
	active energy / reactive energy regenerated	– / –	• / •
Approval		–	calibrated (MID)
Accuracy class		–	
Connection type		3-wire	4-wire
Current measurement	Current transformer x / ..	5 A	–
	Direct input up to	–	80 A
	Power draw	0.7 VA/Phase	
	Input currents galvanically isolated	•	–
Voltage measurement	Voltage circuit	3× 57.7 / 100 V	92…276 / 160…480 V
	Ratio of current transformer	1...1500.0	–
	Power draw	1.5 VA	2 VA
	Frequency	50 Hz	
Voltage supply		self-supplied from voltage input	
Standard S0 pulse output (volt-free contact)	Number/use	1/active energy consumed or 1/reactive energy consumed	1/active energy consumed T1 and T2 1/reactive energy consumed T1 and T2
	Valency	10 Wh, 100 Wh, 1 kWh 10 kWh, 100 kWh, 1000 kWh	1, 2, 5, 10, 20, 50, 100, 200 per kWh
	Pulse duration	50, 100, 200, 300, 400, 500 ms	30…100 ms
	Contact load	110 V DC/AC / 50 mA	3…28 V AC / 90 mA, 3…39 V DC / 90 mA
	LED	10 000 Imp/kWh	1 000 Imp/kWh
LC-Display	backlit	•	
Bus connection		–	
Detection of faulty connections		•	
Tariffs		2	
Ingress protection	Enclosure	IP54	IP51
	Terminal block with cover	IP20	IP40
Input cable cross section	Current transformer	4 mm²	–
	Direct	–	33 mm²
Dimensions	(W x H x D) [mm]	122.5 x 100 x 58.5	72 x 90 x 64
	Width in HP	4	
Mounting	35 mm DIN rail	•	
Weight		260 g	412 g
Operating temperature ambient		-5 … +55 °C	-25 … +55 °C
Special features		Resettable intermediate meter; Instantaneous and maximum active power	1 pulse each for imported active and reactive energy; infrared interface to connect communications module for Modbus / M-Bus

Subject to technical changes / © FRAKO GmbH / www.frako.com

تسلاکالا
021-9102 6126 | teslakala.com

Type		M3PRO 1-5 MID	M3PRO 1-5 MID M-Bus	M3PRO 80 MID M-Bus
Technical data				
Article No.		29-20171	29-20172	29-20173
Measurement	active energy / reactive energy consumed	• / •		
	active energy / reactive energy regenerated	• / •		
Approval		calibrated (MID)		
Accuracy class		B		
Connection type		4-wire		
Current measurement	Current transformer x / ..	1 A / 5 A		–
	Direct input up to	–		80 A
	Power draw	0.7 VA/Phase		
	Input currents galvanically isolated	•		–
Voltage measurement	Voltage circuit	92…276 / 160…480 V		
	Ratio of current transformer	–		
	Power draw	2 VA		
	Frequency	50 Hz		
Voltage supply		self-supplied from voltage input		
Standard S0 pulse output (volt-free contact)	Number/use	1/active energy consumed T1 and T2 1/reactive energy consumed T1 and T2	–	
	Valency	Dependent on current transformer ratio and pulse duration	–	
	Pulse duration	30…100 ms	–	
	Contact load	3…28 V AC / 90 mA, 3…39 V DC / 90 mA	–	
	LED	1 000 Imp/kWh		
LC-Display	backlit	•		
Bus connection		–	RS 485 / M-Bus	
Detection of faulty connections		•		
Tariffs		2		
Ingress protection	Enclosure	IP51		
	Terminal block with cover	IP40		
Input cable cross section	Current transformer	4mm²		–
	Direct	–		33 mm²
Dimensions	(W x H x D) [mm]	72 x 90 x 64		
	Width in HP	4		
Mounting	35 mm DIN rail	•		
Weight		335 g		
Operating temperature ambient		-25 … +55 °C		
Special features		1 pulse each for imported active and reactive energy; infrared interface to connect communications module for Modbus / M-Bus	M-Bus interface for direct connection with the PQM via M-Bus coupler	

تسلاکالا
021-9102 6126 | teslakala.com

Type		M3PRO 1-5 MID ModBus	M3PRO 80 MID ModBus
Technical data			
Article No.		29-20174	29-20175
Measurement	active energy / reactive energy consumed	• / •	
	active energy / reactive energy regenerated	• / •	
Approval		calibrated (MID)	
Accuracy class		B	
Connection type		4-wire	
Current measurement	Current transformer x / ..	1 A / 5 A	–
	Direct input up to	–	80 A
	Power draw	0.7 VA/Phase	
	Input currents galvanically isolated	•	–
Voltage measurement	Voltage circuit	92…276 / 160…480 V	
	Power draw	2 VA	
	Frequency	50 Hz	
Voltage supply		self-supplied from voltage input	
Standard S0 pulse output (volt-free contact)	Number/use	–	
	Valency	–	
	Pulse duration	–	
	Contact load	–	
	LED	1 000 Imp/kWh	
LC-Display	backlit	•	
Bus connection		RS 485 / M-Bus	
Detection of faulty connections		•	
Tariffs		2	
Ingress protection	Enclosure	IP51	
	Terminal block with cover	IP40	
Input cable cross section	Current transformer	4 mm^2	–
	Direct	–	33 mm^2
Dimensions	(W x H x D) [mm]	72 × 90 × 64	
	Width in HP	4	
Mounting	35 mm DIN rail	•	
Weight		335 g	412 g
Operating ambient temperature		-25 … + 55 °C	
Special features		Modbus interface for connection via Modbus RTU directly to the PQM. 1 system point required per counting channel or optionally 7 system points for additional data points such as current, voltage and powers.	

Subject to technical changes / © FRAKO GmbH / www.frako.com

تسلاکالا
021-9102 6126 | teslakala.com

Optional Accessories

Article-No.	Type	Description
29-20104	ECS MODBUS RTU	Modbus communication module. The communication between the module and the energy meter is realized via the infrared interface. Values: energy and power U, I, PF and F.
29-20105	ECS M-Bus	M-Bus communication module. The communication between the module and the energy meter is realized via the infrared interface. Values: energy and power U, I, PF and F.
29-20121	ECS SD-Card Data logger	SD Card data logger with SD Card. The communication between the module and the energy meter is realized via the infrared interface.

Please note that optional accessories are available for all energy meters except for IME Conto D4 Pt-CE4DT12A2.

تسلاکالا
021-9102 6126 | teslakala.com

Dimensions

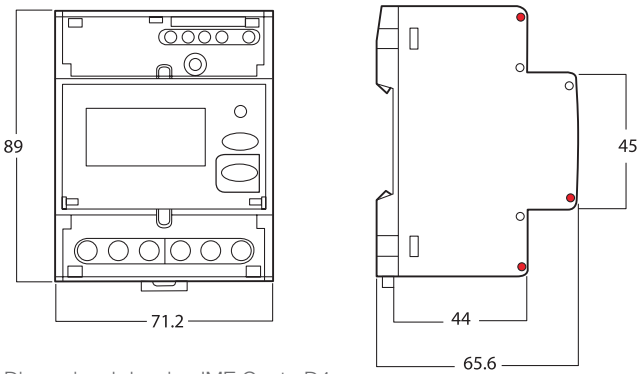

Dimensional drawing IME Conto D4

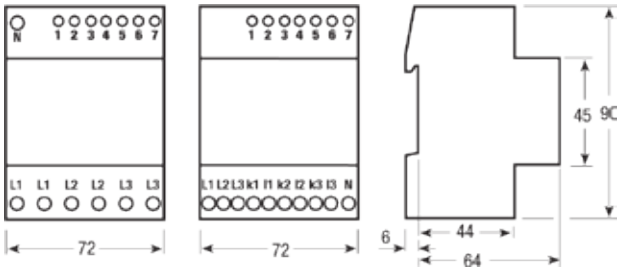

Dimensional drawing
M3PRO 1-5 MID, M3PRO 1-5 MID M-Bus,
M3PRO 1-5 MID ModBus, M3PRO 80 MID,
M3PRO 80 MID M-Bus, M3PRO 80 MID ModBus

All dimensions in mm

Subject to technical changes / © FRAKO GmbH / www.frako.com

تسلاکالا
021-9102 6126 | teslakala.com





EM-UIF / EM-PTF
Frequency-Converter

The pulse output of the Frequency-Converter is connected to the Cost Centre and Alarm System EMF 1102. This offers the possibility to control, detect and visualize sensors with arbitrary output signals and temperatures with the FRAKO Energy Management System.

EM-UIF
Voltage-/Current-/Frequency Converter

For operating data acquisition of analogue signals with the FRAKO Energy Management System.

EM-PTF
Temperature-/Frequency-Converter

For acquiring operating data with the FRAKO Energy Management System, the measured inlet temperatures from –40 °C to +120 °C will be transformed into a pulse frequency from 0 to 5 Hz.

تسلاکالا
021-9102 6126 | teslakala.com

Technical Data EM-UIF

Power Supply	
Mains voltage	230 V AC +/-20 %
Frequency	45 up to 65 Hz
Power consumption	2.5 VA
Input	
Input variable	DC current or DC voltage
Rated voltage	0-20 mA, 4-20 mA, R_i = 3 Ω 0-10 V, 2-10 V, R_i = 160 kΩ
Overloading continuously	2 times at current 5 times at voltage
Surge overload	Twenty times 1 sec at current five times at voltage
Output	
Rated value	0 up to 5 Hz
OPEN collector	npn, max. 30 V, 100 mA max. loadable
Ingress protection	IP40
Version	Housing insulated, protection class 2, at rated voltage up to 300 V (net to neutral conductor), pollution degree 2, according to DIN EN 61010 Part 1 EMV according to DIN EN 50081-2 and DIN EN 61000-6-2
Installation	On standard rail 35 mm according to DIN EN 50022
Operating conditions	
Ambient temperature	-15 °C up to +55 °C
Article-No.	29-20059

Technical Data EM-PTF

Power supply	
Mains voltage	230 V AC +/-20 %
Frequency	45 bis 65 Hz
Power consumption	2.5 VA
Input	
Input variable	Resistor PT100
Rated value	-40 °C up to 120 °C, constant current via the sensor 2 mA
Types of connection	2-/3-or 4-wire, can be selected by DIP switch
2-wire circuit	Lead max. adjustment 10 Ohm via built-in potentiometer
3-wire circuit	Lead max. 100 Ohm, balanced, no adjustment required
4-wire circuit	Lead max. 100 Ohm, no adjustment required
Output	
Rated value	0 up to 5 Hz
OPEN collector	npn, max. 30 V, 100 mA load
Pulse / Pause	50/50 %
Connections	Screw terminals Conductor cross-section: max. 4 mm²
Mechanical construction	
Dimensions	22.5 x 84 x 108 mm (W x H x D)
Ingress protection	Housing/terminals IP30/IP20 according to DIN EN 60529
Version	Insulated housing, degree of polution 2, overvoltage category CAT 3 according to DIN EN 61010 part 1, EMV according to DIN EN 50081-1, DIN EN 61000-6-2
Installation	On standard rail 35 mm according to DIN EN 50022
Weight	Approx. 0.15 kg
Operating conditions	
Ambient temperature	-15 °C up to +55 °C
Article-No.	29-20049

Subject to technical changes / © FRAKO GmbH / www.frako.com

تسلاکالا
021-9102 6126 | teslakala.com

Dimensions

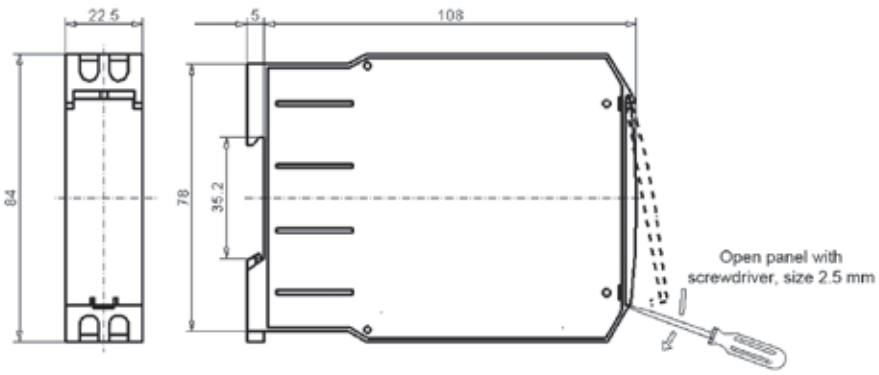

Dimensional drawing EM-UIF, EM-PTF

All dimensions in mm

Accessories



EM-PT 100 Temperature Sensor
Temperature sensor in 4-wire technique for measuring temperatures using the Temperature-/Frequency-Converter EM-PTF, for devices with PT100 input1.

Technical Data

General	
Rated value	100 Ohm at 0 °C
Temperature range	-80 °C up to +260 °C
Material	Stainless steel
Dimensions	
Sensor sleeve	Diameter: 4 mm, length: 50 mm
Connecting cable	Length: 1 000 mm
Article-No.	29-20050

Optional Accessories

Article-No.	Type	Description
29-20051	EM-PT100 MF	Mounting flange for the temperature probe

تسلاکالا
021-9102 6126 | teslakala.com

Subject to technical changes / © FRAKO GmbH / www.frako.com

تسلاکالا
021-9102 6126 | teslakala.com



EM-AM 2108
Analogue Module

Data acquisition system for 8 analogue, freely configurable input channels. This allows to detect and visualize sensors with random output signals with the FRAKO Energy Management System.

Description

- 8 analogue inputs, selectively:
  - Temperature -50 °C up to 150 °C via 5 K NTC
  - 0 / 4 to 20 mA or - 0 to 10 V
- Monitoring of temperatures and analogue signals with upper and lower alarm limit
- External supply voltage 9 to 36 V DC
- Connection via FRAKO Starkstrombus
- Resolution temperature range: 0.1 °C; Accuracy entire temperature range: 1 °C
- Resolution voltage range: 10 mV; max. failure: 30 mV
- Resolution current range: 20 µA; max. failure: 60 µA
- Easy configuration of the EM-AM 2108 via EM-AM-SW software
- For each input of the analogue module the current measurement readings as well as the maximum and the minimum value of the last interval will be displayed by the EM-AM SW software
- By integrating the EM-AM 2108 into the FRAKO Energy Information System all temperatures and analogue signals will be captured and monitored with their upper and lower alarm limits
- The system visualization software EMVIS 3000 allows to analyse and visualize the data

تسلاکالا
021-9102 6126 | teslakala.com

Technical Data

Power Supply	
Mains voltage	9 up to 36 V DC
Power consumption	0.72 VA
Input	
Input variable	Direct current or direct current voltage
Rated value	0 to 20 mA, 4 to 20 mA, R_i = 130 Ohm, 0 to 10V, R_i = 115,13 kOhm
Overload, constant	2.5 times (current), 2.5 times (voltage)
Short-time overload	5 times 1 s (current), 5 times 1 s (voltage)
Temperature measurement	Range: -50 °C up to 150 °C Resolution: approx. 0.1 °C Accuracy: 1.5 °C (-50 °C up to -25 °C); 1.0 °C (-25 °C up to +100 °C); 2.0 °C (+100 °C up to +125 °C); 3.5 °C (+125 °C up to +150 °C)
Current measurement	Range: 0 to 20 mA; 4 to 20 mA Resolution: 20 µA; max. failure: 60 µA
Voltage measurement	Range: 0 to 10 V Resolution: 10 mV; max. failure: 30 mV
Connections	Screw terminals; Wire cross section: max. 1.4 mm²
Interface	
1 FRAKO Starkstrombus	For connection to FRAKO Energy Management System, according to EN 50170 (P-Net), standardised fieldbus, RS-485 transfer rate: 76.8 kbit/s
Display elements	2 LEDs
Mechanical construction	
Dimensions	86 x 128 x 50 mm (W x H x D)
Ingress protection	Housing/terminals IP30/IP20 according to DIN EN 60529
Version	Housing insulated, protection class 3 (SELV), at a rated voltage up to max. 36 V, pollution degree 2, according to EN 61010 part 1 EMV according to EN 61326-1
Installation	On standard rail 35 mm according to DIN EN 50022
Weight	190 g
Operating conditions	
Ambient temperature	0 °C up to +70 °C
Article-No.	20-40009

Optional Accessories

Article-No.	Type	Description
20-10700	Power Supply for analogue module EM-AM 24V DC	AC/DC SMPS adapter, DIN rail-mounted, 24 V DC / 0.35 A and 12 V DC / 20 mA, AC power supply 85 to 264 V (also suitable for EM-PQ 1500)

Subject to technical changes / © FRAKO GmbH / www.frako.com

تسلاکالا
021-9102 6126 | teslakala.com

تسلاکالا
021-9102 6126 | teslakala.com

Index

Power Factor Correction | Power Quality Solutions | Power Quality and Energy Measurements

A

Accessory equipment for PFC Systems on mounting plates ... 99
Active Filters
OSFS ... 183
Analogue Module
EM-AM 2108 ... 251

C

Capacitor Modules
C64C / C84C ... 89
Capacitor Modules – detuned
C64D-P / C84D-P / C65D-P / C85D-P 93
Capacitor Switching Contactors
K3-...K... / K3-...A ... 57
Cost Centre and Alarm Unit
EMF 1102 ... 237

D

Discharge Reactors
FR 3AC ... 61
Display Unit
EM-FD 2500 ... 231
Dynamic Power Factor Correction Systems
C84D-P-E / C85D-P-E / C86D-P-E ... 173
LSFC-E ... 169

E

Electronic Energy Meter
M3PRO 80 MID / M-Bus / ModBus, M3PRO 1-5 MID / M-Bus / ModBus and IME Conto D4 ... 241

F

Frequency-Converter
EM-UIF / EM-PTF ... 247

H

Harmonic Filter Reactors Standard
FDR / FKD ... 35

M

Mains Analysis Devices for DIN rail mounting
PQA 1500 ... 201
Mains Monitoring Instrument for door mounting
PQA 1101 ... 203
Maximum Controller
EM-MC 2200 ... 223
MCS – Modular Construction System
MCS ... 149

P

Passive Harmonic Filters in sheet steel cabinets
LSFC-P4 ... 179
Power Capacitors
LKT ... 9
Power Electronics Capacitors
LKT-F ... 21
Power Factor Control Relays
RM 2106 / RM 2112 / PFC-12TR-1 / PFC-12TR-1-RS485 ... 53
Power Factor Control Relays PQC ... 43
Power Factor Correction Capacitors in sheet steel cases
LKN / LKSLT ... 67
Power Factor Correction Capacitors in sheet steel cases – detuned
LKND-P / LKNS-P ... 73
Power Factor Correction Systems
LSFC ... 121
LSK ... 115
Power Factor Correction Systems – detuned
LSFC-P ... 139
LSK-P ... 129
LSKS-P ... 135
Power Factor Correction Systems on mounting plates
LSPN / LSP ... 81
Power Factor Correction Systems on mounting plates – detuned
LSP-P ... 85
Power Quality Manager, Central Unit for data acquisition
PQM ... 205

R

Repeater
EMB 1101 ... 235

S

Software for Cost Centre Analysis
EMIS® Report ... 219
Switching Module
EMD 1101 ... 239

T

Technical Annex
Guide to selection: Harmonic Filter Reactors → Capacitors ... 155
Supply lead cross sections ... 153
Temperature Sensor
EM-PT 100 ... 249

V

Visualization Software
EMVIS 3000 ... 213

Subject to technical changes / © FRAKO GmbH / www.frako.com

تسلاکالا
021-9102 6126 | teslakala.com



FRAKO Kondensatoren- und Anlagenbau GmbH
Tscheulinstraße 21a
D-79331 Teningen
Phone: +49 7641 453-0
Fax: +49 7641 453-535
sales@frako.com
www.frako.com

FRAKO 95-00333/01/25/10458 Subject to technical changes